SPECIAL TECHNICAL PROVISIONS

FOR

MARLETTE CREEK RESTORATION AND SR28 CROSSING IMPROVEMENT PROJECT

NEVADA TAHOE CONSERVATION DISTRICT

WASHOE COUNTY, NEVADA

FOR USE WITH:

Standard Specifications, as referred to in these Special Technical Provisions, are the Standard Specifications for Construction of Roads and Bridges on Federal Highway Projects (FP-24)," current edition. NDOT Standard Specifications for Road and Bridge Construction, current edition (NDOT Standard Specifications). These Special Technical Provisions are supplemental to the Standard Specifications.

PREPARED BY:

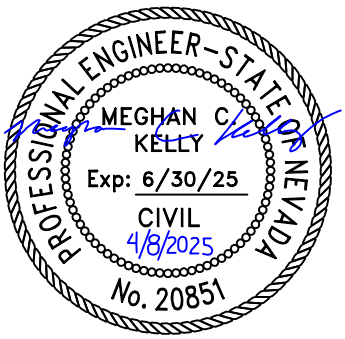

Nevada Tahoe Conservation District
400 Dorla Court
Box 915
Zephyr Cove, NV 89448

Meghan Kelly, P.E.
NV P.E. #: 20851

Date: February 2025

Contents

SECTION 100 – GENERAL 3
SECTION 102 – CONTRACTOR QUALIFICATIONS 3
SECTION 110 – ORDER OF WORK 4
SECTION 120 – PROJECT PERMITS 5
SECTION 130 – MOBILIZATION & DEMOBILIZATION 8
SECTION 140 – STAGING AND STORAGE 10
SECTION 145 – SUBMITTALS 12
SECTION 150 – TRAFFIC CONTROL 13
SECTION 155 – CONSTRUCTION STAKING 15
SECTION 160 – TEMPORARY EROSION CONTROL 16
SECTION 165 – DEWATERING AND/OR DIVERSION 25
SECTION 170 – CLEARING AND GRUBBING AND TREE REMOVAL 27
SECTION 175 – REMOVAL OF EXISTING MICELLANEOUS ITEMS 31
SECTION 200 – GRAVEL, COBBLE, ROCK, BOULDER & OTHER AGGREGATES 32
SECTION 205 –EARTHWORK 36
SECTION 210 – RCB CULVERT STRUCTURE 41
SECTION 220 – FORD CROSSING 44
SECTION 230 – PROPOSED CREEK CHANNEL 45
SECTION 235 – LOGS AND TIMBER 47
SECTION 240 – ROAD DECOMMISSION 48
SECTION 260 – REVEGETATION 48
Appendix A: Preliminary Dewatering and Diversion Plan 56
Appendix B: Jensen Culvert Extension Installation Instructions 57
Appendix C: US Forest Service Resource Protection Measures 58

SECTION 100 – GENERAL

101.01 Description
The work described herein shall conform to the Contract Documents, Project Plans, Standard Specifications, these Special Technical Provisions, and Project Permits. Standard Specifications, as referred to in these Special Technical Provisions, are the Standard Specifications for Construction of Roads and Bridges on Federal Highway Projects (FP-24) https://highways.dot.gov/federal-lands/specs/fp-24.pdf .

Where applicable in the Nevada Department of Transportation (NDOT) right of way, the NDOT Standard Specifications for Road and Bridge Construction, current edition (NDOT Standard Specifications) https://www.dot.nv.gov/home/showpublisheddocument/6916/636257041112930000.

These Special Technical Provisions are supplemental to the Standard Specifications. In case of conflict between the Standard Specifications and these Special Technical Provisions, the Special Technical Provisions shall govern, take precedence over, and be used in lieu of such conflicting portions.

SECTION 102 – CONTRACTOR QUALIFICATIONS

102.01 Description
In addition to any bidder qualifications noted elsewhere in the Contract Documents, Project Plans, Standard Specifications, and these Special Technical Provisions, each bidder shall attach sufficient documentation to the bid forms to clearly demonstrate his/her ability to meet the minimum experience qualifications stated in this section. The following items shall be included in the bid submittal:

1. Project descriptions of similar projects to the Marlette Creek Restoration Project including:
    a. Location of projects
    b. Dates project was initiated and completed by the Contractor
    c. Description of size of restoration
    d. Total contract costs
    e. Client/agency contact in responsible charge (owner of the work)
2. Other references demonstrating Contractor qualifications on similar projects. These references shall only include regulatory, funding and/or local agency representatives or licensed Professional Engineers working on similar projects within the Lake Tahoe Basin.
3. Contractor's license number, classification, & status.

The above items shall clearly demonstrate the Contractor's qualifications to perform the work associated with the Marlette Creek Restoration Project and past similar experience on other projects. The experience to be demonstrated above is required to meet the following minimum requirements:

A. The Contractor and his/her designated Foreman is required to have successfully performed a minimum of two (2) projects, within the past ten (10) years, which included work components of a similar scope and nature (within a US Army Corps of Engineer regulated wetland area or a TRPA Stream Environment Zone) as to that which is indicated herein consisting of minimum project total costs of $750,000 and contract times exceeding 15 days.

B. The Contractor is required to have successfully performed and completed a minimum of one (1) project, within the past five (5) years, which required dewatering or diversion components similar in scope and nature as to that which is indicated herein.

Failure of the Contractor to submit the information required or to demonstrate experience as required in this section shall warrant the Contractor's bid submittal incomplete. The determination of whether the Contractor meets the qualifications is at the sole discretion of the Nevada Tahoe Conservation District.

102.02 Measurement and Payment
There will be no compensation for providing the required bid documents and support materials for a complete bid package for this project. Incomplete bid packages or bid packages received after the submittal deadline will not be considered.

SECTION 110 – ORDER OF WORK

110.01 Description
The construction of this project shall conform to the Contract Documents, Plans, Standard Specifications, and these Special Technical Provisions. Prior to commencing work, the Contractor shall submit to the Engineer a sequence and schedule of work for review and acceptance in accordance with the Standard Specifications and these Special Technical Provisions. The schedule shall include all work necessary for a full and complete project as shown on the Bid Set Design Plans and described in these Special Technical Provisions.

The project requires coordination with several different public entities (US Forest Service, Lake Tahoe Basin Management Unit, Nevada Department of Transportation, the Nevada Division of Environmental Protection (NDEP), the Nevada Tahoe Conservation District, and the Tahoe Regional Planning Agency). The Nevada Tahoe Conservation District will assist the contractor in coordinating with all entities. The Contractor shall be solely responsible for coordinating with all contractors working in the area whether listed in these Special Technical Provisions or not. Pertinent contacts will be provided by NTCD prior to construction.

The order of work shall be as follows:

1. Verification of all underground utilities within the project area.
2. Installation of Temporary Traffic Control Measures.
3. Coordination with NTCD for wildlife surveys and tree removal.
4. Coordination with NTCD and USFS for fish rescue and fish exclusion net installation.
5. Construction of all temporary erosion control measures as shown on the project plans and as approved by the Engineer and NDEP. If tree removal is done in the vicinity
6. Site clearing and grubbing.
7. Installation of all dewatering elements as necessary.
8. Construction of project as shown on the project plans and as described in these Special Technical Provisions. Contractor may select sequence for construction.
9. Restoration of entire project site:
    a. Restoration/revegetation of all disturbed areas.
    b. Removal of all dewatering equipment.
    c. Road sweeping.
    d. Restoration of staging, access, and dewatering areas as needed.

e. Removal of temporary BMPs with approval of Engineer.

10. Pre-Final site walk with the Engineer, Contractor, US Forest Service, NDOT, TRPA, and NDEP.
    a. Development of project punchlist (by Engineer).
11. Completion of punchlist items.
12. Final site walk with Engineer and Contractor.

The Contractor may submit a revised order of work to the Engineer for review and approval. In the event the Engineer does not accept the Contractor's proposed order of work, the above order of work shall hold for the contract.

The Contractor will be responsible for meeting all the requirements of all the regulations and requirements set forth by the US Forest Service, NDEP, and TRPA. In the event fines are levied by any of these agencies, the Contractor shall be solely responsible for all costs associated with these fines. In the event the project receives a stop work order by any entity, the Contractor will not be granted any additional working days. The working days during which no work is performed will be counted as contract working days, even though the Contractor is unable to work due to the stop work order.

The Contractor shall submit a construction schedule in accordance with the provisions of this section, these Special Technical Provisions and the Standard Specifications for review and approval by the Engineer. Critical path items in this construction schedule are items that involve coordination with the US Forest Service, including wildlife surveys and fish salvage. The schedule must dictate the exact timing so that these resource protection measures can be implemented.

110.02 Measurement and Payment

Full compensation for furnishing all labor, materials, tools, equipment, and incidentals for all work associated with all work involved in provisions of this section, complete in place as shown on the Plans, as specified in the Standard Specifications, these Special Technical Provisions, and as directed by the Engineer, shall be considered as included in prices paid for the various contract items of work involved; no additional compensation will be allowed.

SECTION 120 – PROJECT PERMITS

120.01 Description

This project is located within Washoe County, Nevada and the Lake Tahoe Basin and is on US Forest Service, LTBMU lands and Nevada Department of Transportation Right-of-Way and is regulated by the US Forest Service, NDOT, the Tahoe Regional Planning Agency (TRPA), and the Nevada Department of Environmental Protection (NDEP). Furthermore, the project is constructing improvements in a US Army Corps of Engineers jurisdictional wetland, which requires the issuance of a nationwide permit from the US Army Corps of Engineers (USACE) as well as 404/401 certification from the USACE and NDEP and a Temporary Working in Waterways Permit from NDEP.

All project permits have not been received for the project at the time of Bid, however, the plans and specifications outline the expected permit requirements as their development occurred under agency review. The contractor will be responsible for all permit requirements upon receipt of the permits for the project and no additional compensation shall be allowed for. The project permit(s) will have specific requirements covering work to be performed under this contract. The Contractor shall meet the permit(s) requirements for grading season restrictions, stormwater discharges, Best Management Practices (BMPs), selection of staging and storage areas, dewatering and diversion practices,

revegetation and restoration requirements, and all other agency approval conditions. The Contractor shall note that the project is located in sensitive lands (TRPA Stream Environment Zone and US Army Corp of Engineers Wetlands) and thus require special care during construction. The contractor shall also take special note of the US Forest Service Resource Protection Measures document located in Appendix C of these Special Technical Provisions.

The Contractor shall maintain a copy of all permit(s) at the construction site and shall make the permit(s) available to operating personnel during construction activities; also upon request these permit(s) must be made available for public inspection. NTCD will provide the permits to the Contractor.

The Contractor shall maintain a set of stamped plans and special provisions at the construction site and shall make them available to operating personnel during construction activities; upon request, plans and special provisions must be made available for public inspection.

It shall be the Contractor's responsibility to completely inform him or herself of the conditions of all Project Permit(s) and conduct construction operations accordingly. Any requested change to an agency's permit conditions of approval, proposed by the Contractor, shall be submitted to the Engineer for transmittal to USACE, NDEP, NDOT or USFS, or other agency for their approval. The Contractor shall be responsible for adhering to the requirements of the project permits relating to this project. Should conflicts arise between the Standard Specifications and the project permits, the project permits shall take precedence over the Standard Specifications.

The **Contractor is responsible for coordinating the pre-construction meeting with NTCD, USFS, TRPA, and NDEP** to allow for review of the project site and determination of the adequacy of temporary erosion control measures and BMPs deployed by the Contractor. The Contractor shall follow the requests of the reviewing environmental agencies as necessary to bring the construction site temporary erosion control devices and BMPs into compliance with the permit(s) requirements, regulations, and other provisions of these Special Technical Provisions, and the Project Permits. The Contractor shall maintain all temporary erosion control devices and BMPs until all work is complete and the project site is stabilized per acceptance of the Engineer and all relevant agencies in review of the project site at the "Final Walk Through". The Contractor can remove temporary erosion control devices and BMPs only upon approval by the Engineer, NDEP, and the USFS to do such. Attention is directed to the revegetation requirements found elsewhere in these Special Technical Provisions.

The Contractor shall comply with all noxious weed requirements per the United States Forest Service (USFS) and other regulatory agencies. These requirements include but are not limited to the following:

- All tools, equipment and vehicles used for project implementation are required to be weed-free.
- All tools, equipment and vehicles will be cleaned of all attached mud, dirt, and plant parts. This will be done at a vehicle washing station or steam cleaning facility (power or high pressure cleaning) before the equipment and vehicles enter the project area, and before vehicles enter the Lake Tahoe Basin (if they originate from outside the Basin).
- All soil, fill, gravel, rock, mulch, seed, organic matter or other imported materials are required to be weed-free. Use onsite soils, gravel, rock, or organic matter when possible. Otherwise, obtain materials from pits, quarries, nurseries, and other sources that are certified or have been determined to be weed-free by the noxious weed coordinator of the USFS Lake Tahoe Basin Management Unit.

- Minimize the amount of ground and vegetation disturbance in the construction areas. Reestablish vegetation on all disturbed bare ground to minimize weed establishment and infestation.
- Use weed-free mulches, and seed sources. Salvage topsoil from project area for use in onsite revegetation, unless contaminated with noxious weeds. All activates that require seeding or planting must utilize locally collected native seed sources when possible. Plant and seed material should be collected from or near the project area, from within the same watershed, and at a similar elevation when possible. Persistent non-native such as Phleum pretense (cultivated timothy), Dactylis glomerata (orchard grass), or Lolium spp. (ryegrass) will not be used. This requirement is consistent with the USFS Region 5 policy that directs the use of native plant material for revegetation and restoration for maintaining "the overall national goal of conserving the biodiversity, health, productivity, and sustainable use of forest, rangeland, and aquatic ecosystems." Seed mixes should be accepted by the Revegetation Specialist.
- Staging areas for equipment, materials, or crews shall not be sited in weed infested areas.

The project is located within a sensitive land capability class area (1a SEZ and LC 2) as classified by the TRPA. The Contractor will be required to use extreme caution in all activities associated with the project. The Contractor will be required to meet all of the requirements shown on the Plans, as described in the Project Permit(s) and these Special Technical Provisions. The Contractor is restricted from parking equipment, and storing materials within the Project limits, except as shown on the Plans or as directed by the Engineer. Soil and other materials shall not be stored, stockpiled, or otherwise placed within areas or on a surface that is not designated for such treatment on the drawings. Refueling of equipment will not be allowed within the floodplain project work areas or other SEZ areas.

The Contractor is further required to only use "low impact equipment" for this project. No equipment having a ground pressure that will disturb and/or compact the ground (generally ground pressures less than 25 psi) will be allowed off of paved areas, or designated temporary truck haul routes under any circumstance. All equipment on the project site, (off paved areas or designated truck haul routes), shall meet this low pressure requirement. TRPA prefers the use of "rubber track" equipment as low impact equipment and the Contractor is encouraged to use "rubber track" equipment in sensitive land capability areas. The Contractor shall provide detailed information, (manufacture's data brochure, or other product specific materials), to the Engineer for review and acceptance prior to any equipment being mobilized to the project site and placed in the work.

The Contractor shall meet all of the requirements of the project permits as issued by the permitting agencies, and any provisions for rights-of-entries issued by the US Forest Service. The following project permits may be found as appendices to the Contract Documents:

- US Army Corp of Engineers – *NWP#27*
- US Army Corp of Engineers – 404
- Nevada Department of Environmental Protection – 401
- Categorical Exclusion from US Forest Service and associated Resource Protection Measures

120.02 Measurement and Payment

Full compensation for furnishing all labor, materials, tools, equipment, and incidentals for all work associated with performing all the work involved in provisions of this section, complete in place as shown on the Project Plans, as specified in the Contract Documents, Project Permits(s), Standard

Specifications, these Special Technical Provisions, and as directed by the Engineer, shall be considered as included in prices paid for the various contract items of work involved; and no additional compensation will be allowed for.

SECTION 130 – MOBILIZATION & DEMOBILIZATION

130.01 Mobilization
This item shall consist of mobilization of the Contractor's forces which shall include obtaining all bonds, insurance, and permits; purchasing, transportation, setup, staging and storage of equipment and materials; establishing a field office at the project site; plus furnishing all labor, materials, tools, equipment, and incidentals required for performance and completion of the work as shown on the Project Plans, and specified in the Contract Documents, Project Permit(s), Standard Specifications, these Special Technical Provisions, and as directed by the Engineer. Mobilization shall also include but not be limited to the following items:

• Provide on-site sanitary facilities;
• Post all Occupational Safety and Health Administration (OSHA) required notices;
• Post all prevailing wage requirements;
• Prepare and transmit all submittals as noted on the Plans, and as specified in the Contract Documents, Standard Specifications, and these Special Technical Provisions;
• Wash and clean all tools and equipment prior bringing on site, as specified in the Project Permits, Contract Documents, Standard Specifications, these Special Technical Provisions, and as required by TRPA and the US Forest Service.

130.02 Demobilization
Demobilization shall consist of the removal of all materials, equipment, signage, temporary pollution control materials, trash, debris, and all other items imported to or generated on-site as a result of the work completed by the Contractor and his/her operations. Furthermore, demobilization shall include cleaning the existing drainage inlets, sediment caps, pipes, and culverts within the project boundary. Furthermore, demobilization shall include repairing all pavements, walkways, infrastructure, signage, landscape, roads, trails, or other public or private facilities damaged by construction activities to their pre-construction conditions using comparable materials as accepted and directed by the Engineer. All disturbed areas shall be returned, as nearly as possible, to the lines and grades which existed prior to construction except where modified as part of the work so designated on the Plans. Attention is directed to Appendix C Resource Protection Measures.

At the conclusion of work, final acceptance of the Project improvements must be in the form of a written “Notice of Completion.”

130.03 Project Sign
Mobilization shall include erection of one project sign to be provided by NTCD. The project sign shall be constructed in accordance with details provided within the Project Plans and located as directed by the Engineer. The project sign shall be erected within five (5) working days of initial mobilization. Maintenance of the project sign is the Contractor's responsibility until the sign is removed by the Contractor at the end of the construction contract. For this project, one (1) project sign will be erected.

130.04 Record Drawings
The Contractor shall keep accurate records on a set of project black line prints (22 inches x 34 inches) of all deviations from the Project plans including additions, deletions to the work, all changes in location, elevation, and character of the work not otherwise shown or noted on the Project Plans. NTCD will furnish up to six (6) sets of full size black line prints for use at no cost to the Contractor.

Record drawings plans shall be provided to the Engineer for acceptance within one (1) calendar month after project completion as defined by the Engineer. Release of retention monies will not occur prior to submittal and acceptance of the final record drawings, which shall be a comprehensive set of Record Drawings detailing all aspects of the Project. One (1) set of full sized (22x34) hard copy record drawing shall be provided with changes to the original Contract work shown in red color, including revision clouds. All redline changes and details to be shown on the record drawings shall include, but not be limited to, difference in quantities of the original plans vs. actual installation (as appropriate), modifications to the location and elevations of public utility and storm drainage facilities, any utility relocations, any signage or traffic control devices, and any other modifications, additions or adjustments to any other facilities not shown or as modified on the Project Plans.

Record drawings plans shall be signed and dated by the Contractor or the sub-contractor that actually constructed the facility. In addition, company names of the Contractor and sub-contractors shall be added to the Title Sheet of the record drawings. Should the Contractor not provide this information to the Engineer in the time specified in this section, or to the acceptance of the Engineer (record drawings do not note all changes to the project) the Engineer will not accept the record drawings, retention shall not be released on the project, the record plans will be returned to the Contractor and the Contractor shall resubmit the record drawings to meet the requirements of this section to the acceptance of the Engineer.

130.05 Measurement and Payment
"Mobilization and Demobilization", as described above shall be considered one bid item and paid for on a **lump sum** basis. Project Sign, as described above shall be considered as included with Mobilization and Demobilization and no additional compensation shall be allowed for. Record Drawings, as described above shall be considered as included with **"Mobilization and Demobilization"** and no additional compensation shall be allowed for. **"Mobilization and Demobilization"** shall be measured on a lump sum basis, completed and accepted by the Engineer as conforming to all the requirements in the complete work.

The contract price paid for **"Mobilization and Demobilization"** shall include full compensation for mobilizing the Contractor's forces which shall include but not be limited to: bonds, insurance, permits, record drawings, purchasing, transporting equipment, setup, temporary power source and installation, project signs, establishment of a field office, sanitation facilities, and furnishing all labor, materials, tools, equipment, and incidentals required for performance and completion of the work; including full compensation for operations required to demobilize the Contractor's forces which shall include but not be limited to: the removal of all equipment, materials, debris, project signs, field office, sanitation facilities, temporary BMPs, tree protection fencing, and project clean-up; for the contract lump sum price bid, as shown on the Plans, in accordance with the Contract Documents, Standard Specifications, these Special Technical Provisions, project permit(s), and to the satisfaction of the Engineer.

Partial payments paid for **"Mobilization and Demobilization"** shall be made as follows:

- When 5% of the total original contract amount is earned from other bid items, 50% of the amount bid for mobilization/demobilization will be paid.
- When 10% of the total original contract amount is earned from other bid items, 100% of the amount bid for mobilization will be paid.

Full compensation for conforming to the provisions of this Section, not otherwise provided for, shall be considered as included in prices paid for the various contract items of work involved, and no additional compensation will be allowed.

SECTION 140 – STAGING AND STORAGE

140.01 Staging and Storage Areas
The staging and storage areas as identified on the Project Plans are allowed for use by the Contractor in accordance with the Contract Documents, Project Permit(s), Standard Specifications, and these Special Technical Provisions. These staging/storage areas are owned by the US Forest Service and are considered public lands and shall be maintained at all times in a clean and safe environment, including any provisions for rights-of-entries issued by the US Forest Service or US Department of Agriculture. The Contractors use of the designated staging/storage areas shall be limited to and/or controlled by the restrictions as noted on the Project Plans, Project Permits, and elsewhere in these Special Technical Provisions.

If the Contractor wishes to make use of additional areas, for staging/storage activities, not identified on the Plans, it will be the Contractor's sole responsibility to secure use of these areas with agreements with the individual property owners; and file a copy of said authorization with the Engineer. The Contractor shall further be responsible for establishing all necessary and required temporary erosion control protections. The Contractor will be responsible for bearing all costs with securing these areas, and all efforts associated with the approvals, setup, maintenance, decommissioning and restoration, with no additional compensation allowed for. The Contractor shall be responsible for appropriate security and safety measures at all staging/storage areas to protect property and the public.

Set-up, use, and restoration of all staging/storage areas requires the Contractor to protect all existing facilities, equipment, vegetation, and surface features (such as, but not limited to, fences, posts, signs, boulders, landscaping, slopes, etc.) in place. Special care will need to be given to some cultural sites that will be flagged in the field prior to construction. Should the Contractor's operations damage any of these items the Contractor shall replace, in kind, the damaged or destroyed item. The damage or destruction of any item will be determined by the Engineer during the course of construction or at the final punchlist development. In the event the Contractor needs to relocate any item (boulder, fence, etc.) the Contractor shall replace the item to its original location. If the relocated item is damaged, as determined by the Engineer, the Contractor will be required to replace the damaged item with an in-kind replacement. No additional compensation will be allowed for any relocation, or replacement of damaged items, this will be at the sole cost to the Contractor.

The Contractor shall not proceed with any construction until truck haul routes and temporary haul roads have been identified and accepted to the satisfaction of the Engineer, NTCD and the US Forest Service. **The Contractor shall submit a electronic and hard copy of a proposed truck haul route plan, along with the proposed project construction schedule and traffic control plan, to the Engineer for review and acceptance at least seven (7) calendar days prior to the scheduled Pre-Construction Meeting.** Any days

lost due to the lack of an accepted truck haul plan will be charged against the Contractor's allowable work days. The Contractor's truck haul route plan shall include, but not be limited to, the following:

- Proposed construction zone;
- Proposed storage areas;
- Location of flaggers (to control truck access, where applicable);
- Construction phasing (including phasing of intersection construction and detours, if any); and,
- Proposed truck route (including the location of other construction projects which impact, or may be impacted by, the proposed haul route.)

All staging/storage areas shall comply with the US Forest Service's and TRPA's requirements for BMPs while storing or stockpiling materials. The Contractor shall be responsible for locating staging/storage areas and will need to install all temporary erosion controls and BMPs and maintain them at all times during construction and until project closeout. The limits of the staging/storage areas shall be reviewed and accepted by the Engineer, NTCD, and the US Forest Service prior to use.

At the completion of the work or when no longer required for use, all construction staging/storage areas shall be cleared of all equipment, tools, materials, trash, debris, etc to produce a clean area and returned, as nearly as possible, to the lines and grades which existed prior to construction.

The restored staging/storage areas, if areas exist as an unpaved condition, shall be treated with the final Revegetation Treatment Type as shown on the Plans (if any areas for Staging/Storage are used and not shown on the Revegetation Plans, the Contractor shall treat the area with Revegetation Treatment Type as directed by the Engineer) and as described in these Special Technical Provisions. For storage and staging areas in paved areas, the areas shall be swept clean and returned to the existing condition, prior to use. The Engineer will inspect the paved areas, and if damage has occurred, whether by fault of the contractor's operations or not, the contractor will be required to make remedial action, including complete pavement restoration. No additional compensation shall be allowed for any remedial restoration work of paved areas, including complete replacement of the pavement areas.

140.02 Measurement and Payment

"Staging and Storage" shall be measured on a **lump sum** basis, accepted by the Engineer as conforming to all the requirements in the complete work. The contract price paid for "**Staging and Storage"** shall include set-up of all **"Staging and Storage"** areas and installation of any applicable temporary erosion control measures and BMPs (except where otherwise paid for) and furnishing all labor, materials, tools, equipment, and incidentals required for performance and completion of the work; including full compensation for operations required to remove and dispose of all materials, clean-up, and restore the site to its pre-construction condition; for the contract lump sum price bid, as shown on the Plans, in accordance with the Contract Documents, Standard Specifications, these Special Technical Provisions, Project Permit(s), and to the satisfaction of the Engineer.

The schedule for payment for **"Staging and Storage"** shall be in direct proportion to the percentage of work completed; i.e. if 20% of the project is completed, the Contractor may request payment for 20% of the lump sum total of the bid item for **"Staging and Storage"** . Measurement of the percentage of work completed shall be based on the percentage of work billed by the Contractor based on the total dollar amount of the contract bid price. Increases in the total contract price for any reason do not justify an increase in the lump sum price paid for the **"Staging and Storage"** bid item.

Full compensation for conforming to the provisions of this Section, not otherwise provided for, shall be considered as included in prices paid for the various contract items of work involved, and no additional compensation will be allowed.

SECTION 145 – SUBMITTALS

145.01 General

Where required by the Contract Documents, project permit(s), Project Plans, Standard Specifications, elsewhere in these Special Technical Provisions, and/or as indicted herein, the Contractor shall provide submittals, and furnish shop drawings and material certifications to the Engineer for review and acceptance. The required number of submittals, shop drawings and certificates shall be delivered within the specified time frames, including a transmittal letter in conformance with the Contract Documents, Standard Specifications, and these Special Technical Provisions. The transmittal letter at a minimum shall include the following information:

A. Submittal number and item description
B. Scheduled date of submittal
C. Specification section/item number
D. Supplier and/or manufacturer, plus contact information
E. Contractor or sub-contractor name and point of contact information

Submittals may be submitted electronically or as a hard copy. Electronic submittals are preferred.

145.02 Submittals Required

The following items require a submittal, shop drawing, and/or material certification for review and acceptance by the Engineer (this list may not be complete; it is the Contractors responsibility to review and be knowledgeable with all portions of the project permits, Plans, Contract Documents, Standard Specifications, and these Special Technical Provisions for any additional requirements):

- Construction Schedule
    - Critical path items that must be accurate in schedule for coordination include construction start, tree removal, temporary erosion control, dewatering, grading, channel construction, right-of-way work, and revegetation.
- Traffic Control Plan, and Truck Haul Routes
- Equipment list for all equipment to be used, including the following minimum information:
    - Manufacturer and Model
    - Ground pressure rating (in psi)
    - Certification for washing/steam cleaning, including date
- Filter fence, sediment coir logs, and other BMP materials
- Construction limit fence
- Engineered fabrics
- Aggregates used in the work
- Cobble, boulders, gravel, and sand used in the work
- Aggregate base (AB), imported fill, engineered fill, and bedding materials
- Material testing reports and other data necessary to provide the Engineer with established laboratory values for optimum moisture and maximum dry density, for use of any native soils, imported soils and aggregates requiring density testing
- Weed-free certification certificates for any imported materials to be used in the project

- Asphalt mix design and other bituminous materials used in the work (if applicable, see section 140 of these Special Provisions).
- Concrete mix design
- Loose aggregate samples as specified in Section 200 “Gravel, Cobble, Rock, Boulder & Other Aggregates” for color, size, and shape inspection
- Revegetation items as specified in Section 260 “Revegetation”
- Shop drawings
- Record Drawings

145.03 Measurement and Payment
Full compensation for furnishing all labor, materials, tools, equipment, and incidentals for all work associated with performing all the work involved in provisions of this section, complete in place as shown on the Project Plans, as specified in the Contract Documents, Project Permit(s), Standard Specifications, these Special Technical Provisions, and as directed by the Engineer, shall be considered as included in prices paid for the various contract items of work involved; and no additional compensation will be allowed for.

SECTION 150 – TRAFFIC CONTROL

150.01 Traffic Control Plan
Work under this item shall consist of furnishing all labor, tools, materials, and equipment necessary to complete and maintain all traffic control provisions in accordance with the Plans, Contract Documents, Standard Specifications and these Special Technical Provisions, and as directed by the Engineer during the life of the Contract. All traffic control devices and plans shall conform to the latest editions of the Manual on Uniform Traffic Control Devices (MUTCD) and the Standard Specifications for Construction of Roads and Bridges on Federal Highway Projects (FP-14).
The Contractor shall submit the proposed traffic control plan, along with the proposed project construction schedule and truck haul route plan, to the Engineer for review and comments at least seven (7) calendar days prior to the scheduled Pre-Construction Meeting.

- The Contractor's traffic control plans shall include, but not be limited to, the following:
- Designated construction site Traffic Control Supervisor (TCS) name and contact information
- Proposed construction zone and existing speed limits
- All construction signing
- Location of flaggers
- Types and location of traffic control devices
- Construction phasing (including phasing of intersection construction and detours, if any)
- Lane crossovers between construction phases
- Special events scheduling
- Detours
- Accommodations for pedestrians and bicycles
- Intersection Control Strategy

The Engineer, US Forest Service personnel, and NDOT will provide written comments and/or corrections to the Traffic Control Plans. If necessary, the Contractor and Engineer will meet to consider the comments and/or corrections to the plan prior to the preconstruction conference to resolve any issue

relative to the traffic control plans. Upon resolution of all issues or acceptance of the traffic control plans as submitted, the Engineer shall accept the plans in writing.

Acceptance by the Engineer of the submitted traffic control plans shall in no way relieve the Contractor of the responsibility for safety requirements. Acceptance of the traffic control plans by the Engineer indicates that the plans generally appear to conform to the contract requirements. Such acceptance shall in no way be construed as confirmation of the technical accuracy or adequacy of the contents of the plans and shall not relieve the Contractor of the obligation to institute traffic control measures in full compliance with contract requirements, and which function safely and correctly, and are in conformance with applicable statutes, ordinances, and regulations. If during construction, revisions to the accepted plans are necessary for safety or accommodation to traffic, the Engineer may require such revisions.

Any request by the Contractor to change the traffic control plans shall be submitted in writing at least five (5) working days prior to implementation. Such requests must be accepted in writing by the Engineer prior to implementation. Traffic control plans shall be maintained and must be current with the applicable phase of the work.

150.02 Traffic Control Notification
Upon acceptance of the traffic control plans, and at least five (5) working days prior to beginning construction, the Contractor shall notify and submit a copy of the accepted traffic control plans to the Engineer, NDOT and appropriate police and fire departments, REMSA, and any other emergency service as directed by the Engineer.

150.03 Existing Signs
If existing traffic control device regulatory signage (i.e. stop, yield, speed limit, etc) is removed or damaged due to the Contractor's operations, the Contractor shall notify the appropriate jurisdiction maintenance department and immediately install temporary signs of the same designation as close as possible to the original location.

All existing traffic control devices removed to facilitate construction of the project improvements, shall be salvaged and replaced to its original condition as part of the work. Any materials that are damaged or lost shall be replaced in like kind. All traffic control devices require acceptance of the Engineer.

150.05 Measurement and Payment
"Traffic Control" shall be measured on a **lump sum** basis, completed and accepted by the Engineer as conforming to all the requirements in the complete work.

The contract price paid for **"Traffic Control"** shall include full compensation for preparation and submittal of a traffic control plan, and for furnishing all labor, materials, tools, equipment, and incidentals to perform all the work involved in provisions of this section, including but not limited to temporary construction signs and traffic control devices, flagging, flasher units, barricades, lights, electrical power, resetting of traffic signs and delineators, and all incidentals and materials necessary to provide these items for the duration of construction.

The schedule for payment for **"Traffic Control"** shall be in direct proportion to the percentage of work completed; i.e. if 20% of the project is completed, the Contractor may request payment for 20% of the lump sum total of the bid item for traffic control. Measurement of the percentage of work completed

per each phase shall be based on the percentage of work billed by the Contractor based on the total dollar amount of the contract bid price. Increases in the total contract price for any reason do not justify an increase in the lump sum price paid for any of the traffic control bid items. The Engineer reserves the right to adjust the partial payment amounts of these said bid items based on any adjustments made to other pay items on the payment request by the Engineer.

Full compensation for conforming to the provisions of this Section, not otherwise provided for, shall be considered as included in prices paid for the various contract items of work involved, and no additional compensation will be allowed.

SECTION 155 – CONSTRUCTION STAKING

155.01 Description
Work under this item shall consist of furnishing all labor, tools, materials, and equipment necessary to complete construction staking in accordance with the Standard Plans and Specifications and these Special Technical Provisions.

NTCD shall furnish one set of stakes and/or marks to establish lines and grades required for the completion of the work as shown on the Plans and as specified in the Standard Specifications and these Special Technical Provisions. The Contractor is responsible for notifying the Engineer at least seven (7) days in advance of when staking is needed. The Contractor will be responsible for any and all additional construction staking necessary for the full and complete construction of the Project. The Contractor shall be solely responsible for maintenance and protection of the survey stakes or marks. Contractor's construction staking will be verified by the Engineer, at the Engineer's discretion.

NTCD shall furnish labor and surveying equipment necessary for staking the Project including the following:

- Control points,
- Limits of grading and grade breaks,
- Stream alignments and offsets, and
- In stream structure locations and offsets.
- Culvert wingwall locations, elevations, and offsets.

The contractor shall provide any survey in excess of the aforementioned items.

All stakes and survey markers will be conspicuously marked with flagging tape or paint. The Contractor shall inform the Subcontractors of the importance of the preservation of all survey markers. The Contractor shall be responsible for protecting and maintaining all stakes from destruction. In the event that one or more of the stakes are damaged or destroyed, the Contractor will replace the stakes at the expense of the Contractor.

The Contractor's surveyor will be provided with the northing, easting, and elevation of the control points existing in the field as shown on the Project Plans. Additionally, the Contractor's surveyor will be provided with an electronic copy (ASCI Format) of the control points depicted on the Project Plans to develop the construction staking as stated in these Special Technical Provisions.

If the Contractor's surveyor wishes to develop a different work plan it shall be the Contractor's responsibility to develop such a work plan and present to the Project Engineer for approval.

155.02 Measurement and Payment
Full compensation for furnishing all labor, materials, tools, equipment, and incidentals for all work associated with all work involved in provisions of this section, complete in place as shown on the Plans, as specified in the Standard Specifications, these Special Technical Provisions, and as directed by the Engineer, should be incidental to the other construction items; no additional compensation will be allowed.

SECTION 160 – TEMPORARY EROSION CONTROL

160.01 General
This work shall consist of temporary erosion control measures, devices, and BMPs that may be shown on the Project Plans, and as specified in the Contract Documents, Project Permit(s), Standard Specifications, these Special Technical Provisions, or as directed by the Engineer during the life of the contract. Temporary erosion control measures will also be required at staging/storage areas utilized during project construction. Said work is intended to provide prevention, control, and abatement of water and air pollution within the limits of the project and to minimize damage to the work, adjacent properties and Lake Tahoe, streams, or other bodies of water.

The Contractor shall submit any proposed revisions to the applicable Project Plan sheets for Temporary Erosion Control and the Dewatering and/or Diversion operations. No work shall be started until applicable plan sheets, schedules and methods of operation for temporary pollution control are reviewed and accepted by the Engineer, TRPA, NTCD, USFS, and NDEP. The Contractor is reminded that the project is located within the Lake Tahoe Basin and all pollution control measures and clean-up procedures must satisfy the requirements of TRPA, USFS, NDEP and the permit(s) issued for the project. During the course of project construction, the Contractor shall cooperate with the Engineer, USFS, NDEP, TRPA, and other regulatory officials and take immediate action as directed to protect water bodies and sensitive areas and provide for erosion or other pollution control.

Installation and maintenance of temporary erosion control measures, devices and BMPs shall conform to the requirements as stated within this section and the National Best Management Practices for Water Quality Management on National Forest System Lands (Volume 1, National Core BMP Technical Guide FS-990a, 2012).

As-Directed Placement
Due to the nature of the project and expected field direction from the Engineer, USFS, and permitting agencies, the Contractor shall make provisions to furnish all labor, tools, materials, and equipment as necessary to furnish and place additional temporary erosion control devices in the work (i.e. beyond or in addition to what is designated on the Project Plans) as-directed by the Engineer, in conformance with the Contract Documents, Project Permits, Standard Specifications, and these Special Technical Provisions. Installation, maintenance, removal, and disposal of any additional as-directed temporary erosion control device shall be considered as included in the applicable "as directed" bid item unit price, and no additional compensation will be allowed. The installation and location of any as-directed temporary erosion control device shall only occur as determined and marked in the field by the Engineer.

The intent of the as-directed temporary erosion control device bid items, is to provide the Engineer and Contractor with a means and allowance for additional temporary erosion control devices to be incorporated in the work where modifications to the construction sequence, changing field conditions, temporary stockpiles, and other potential minor unknowns can be adequately addressed in order to maintain compliance with the Project permits.

The Contractor will not be compensated for the installation of any additional "as-directed" temporary erosion control devices without prior direction and acceptance of the Engineer.

Temporary Soil Stabilization
The Contractor shall install temporary soil stabilization materials for water pollution control in all disturbed work areas that are considered inactive (i.e. excess of 14 days) or before forecast storm events. Should any temporary erosion control of this nature be required elsewhere as directed by the Engineer and/or regulatory agencies, the Contractor shall install within 48 hours of notification. Where applicable and upon acceptance of the Engineer, the Contractor shall furnish and apply/install temporary mulch, temporary hydraulic mulch, temporary erosion control blankets, or temporary covers in conformance with the Standard Specifications and these Special Provisions. Materials and construction methods shall comply with the Standard Specifications and these Special Provisions.
The Contractor shall maintain a temporary cover on all stockpiles at all times. Whenever a temporary cover is removed to perform other work, the temporary cover shall be replaced and secured within one (1) hour of stopping work.

Compensation for the requirements of this section, not otherwise provided for in a specified bid item, shall be considered included in prices paid for the various contract items of work involved, and no additional compensation will be allowed.

160.02 Gravel Construction Access
Work under this item shall consist of furnishing all labor, tools, equipment, and materials necessary to install, maintain, remove, and dispose of this temporary erosion control measure as required by the Project Plans, Contract Documents, Standard Specifications, these Special Technical Provisions, Project Permit(s), and TRPA Best Management Practices.

Work under this item shall consist of clearing and grubbing, excavation, furnishing and placing reinforcement mat, furnishing and placing rock at each entrance/exit access road, maintenance (i.e. removal of large quantities of captured sediment, and/or placement of additional rock during course of construction), removal, disposal of excess materials, and restoration of disturbed area.

Fabric to be used for the reinforcement mat shall be manufactured from polyester, nylon, or polypropylene material, or any combination thereof. Fabric shall be manufactured from virgin, or recycled or a combination of virgin and recycled, polymer materials. No virgin or recycled materials shall contain biodegradable filler materials that can degrade the physical or chemical characteristics of the finished fabric. The fabric shall be a non-woven, needle-punched fabric. The fabric shall be permeable, not act as a wicking agent, and shall conform to the following:

Test	Test Method	Requirement
Weight, grams per square meter	D 3776	135 min.
Grab Tensile Strength, Newton, (25 millimeter grip, in each direction)	D 4623	0.40 min.

Elongation at Break, percent	D 4632	30 min.
Toughness, kilonewtons (percent elongation x grab tensile strength)		26 min.
Permittivity, 1/sec.	D 4491	0.5 min.
Ultraviolet Resistance, percent strength retention	D 4355	70 min.

Rocks shall be angular to sub-angular in shape and shall conform to the material quality requirements in Section 200.07, Riprap, of the Standard Specifications for resistance to wear, absorption, apparent specific gravity, and durability. Rocks used for the gravel construction entrance/exit shall conform to the following sizes:

Square Screen Size	Percent Passing
6 inches	100
3 inches	0-20

Each gravel construction entrance/exit shall be of adequate size to prevent the tracking of sediment and materials onto any paved public right-of-way. At a minimum the size of each gravel construction entrance/exit shall be as shown on the Project Plans.

While the gravel construction entrance/exit is in use, pavement shall be cleaned and sediment removed at least once a day and as often as necessary when directed by the Engineer. Soil and sediment or other extraneous material tracked onto existing pavement shall not be allowed to enter any existing or proposed drainage facilities.

In the event the Contractor's operations are causing excessive tracking of materials the Engineer may direct the Contractor to replace the gravel construction entrance/exit, expand the size (area – length and/or width) of the gravel construction entrance/exit, and/or expand the depth of the gravel construction entrance/exit. In the event this is required, the Contractor will not be entitled to any additional payment.

When no longer required as shown on the Project Plans or as determined by the Engineer, each gravel construction entrance/exit shall become the property of the Contractor and be removed and disposed of in conformance with the Contract Documents, Standard Specifications, and these Special Technical Provisions. Under no circumstance shall any of the materials used for gravel construction entrance/exit be re-used on the project. All areas disturbed by the placement and use of each gravel construction entrance/exit shall be graded and restored to its pre-existing condition, including any provisions for revegetation found elsewhere in these Special Technical Provisions.

Gravel construction entrance/exit is considered a temporary erosion control measure or BMP. A fine of $100 per day will be levied against the Contractor for each day the Contractor delays in responding to the Engineer's request to install new temporary erosion control devices and/or maintain existing temporary erosion control devices, in addition to any other fines levied by any other regulatory agency with no additional compensation allowed for.

160.03 Construction Limit Fence. Work under this item shall consist of furnishing all labor, tools, equipment, and materials necessary to install, maintain, remove, and dispose of this BMP as required by the Project Plans, Contract Documents, Standard Specifications, these Special Technical Provisions, Project Permit(s), and TRPA Best Management Practices.

The Contractor shall perform all construction activities that are outside the road right-of-way within the construction limits (and/or grading limits) as shown on the Project Plans and staked by the Contractor's surveyor, and as delineated with construction limit fence installed by the Contractor. Where directed by the Engineer and/or shown on the plans, construction limit fence shall be placed around individual trees or groups of trees that are to remain, in accordance with the Tree Protection and Construction Limit Fence depicted on the project plans.

The area within which the Contractor will be allowed to conduct his/her construction operations will be the area within the limits of the construction limit fencing and/or grading limits as shown on the Project Plans. Where located within the immediate vicinity of any trees (or dripline), the width of the work area will be reduced in order to protect the trees. The Contractor shall review each such location to determine what equipment can be used to install the improvements at these locations or if hand work will be necessary. The costs associated with working within these reduced widths shall be included in the unit price bid for the applicable item of work with no additional compensation therefore.

Contractor's attention is directed to the applicable bid item descriptions in these Special Technical Provisions regarding the type of equipment that can be used in construction on sensitive land areas. Where tree protection fencing cannot be placed at the dripline of the tree, as determined by the Engineer in coordination with TRPA, wood batten (as shown on the Project Plans) with bottom set approximately 3 feet above ground surface shall be strapped to the tree trunk (space between wood batten shall be no more than 6"). The unit price bid for construction limit and tree protection fence shall also apply to this condition (i.e. linear foot measurement of tree circumference where wood batten is attached). Construction limit and tree protection fencing shall be inspected daily and repaired, secured, and/or replaced as necessary to maintain and preserve its intended purpose. All construction limit and tree protection fencing shall remain in place during any construction activities unless directed by the Engineer. Tree protection and construction limit fencing is considered a temporary erosion control measure or BMP.

A fine of $100 per day will be levied against the Contractor for each day the Contractor delays in responding to the Engineer's request to install new temporary erosion control devices and/or maintain existing temporary erosion control devices, in addition to any other fines levied by any other regulatory agency with no additional compensation allowed for.

160.04 Filter Fence. Work under this item shall consist of furnishing all labor, tools, equipment, and materials necessary to install, maintain, remove, and dispose of this temporary erosion control measure as required by the Project Plans, Contract Documents, Standard Specifications, these Special Technical Provisions, Project Permit(s), and TRPA Best Management Practices.

Filter (silt) fence shall be manufactured from polyester or polypropylene material. The fabric shall be woven and shall conform to the following:

Test	Test Method	Requirement
Grab Tensile Strength, Newton, (25 millimeter grip, in each direction)	4623	400 min.
Elongation at Break, percent	4632	20 min.
Apparent Opening Size, Micrometers (um)	D 4751	850 min.
Coefficient of Permeability, cm/sec.	D 4491	0.01 min.

Ultraviolet Resistance, percent strength retention	D 4355	90 min.

- Filter fence fabric shall be handled and placed in accordance with the manufacturer's recommendations. The fabric shall be aligned and placed in a wrinkle-free manner.
- When joints are necessary, filter fence fabric shall be spliced together only at a support post, with a minimum twelve (12) inches overlap and securely sealed or stitched. See manufacturer's recommendations. Should the filter fence fabric be damaged, the torn or punctured section shall be repaired by placing a piece of fabric that is large enough to cover the damaged area and to meet the overlap requirement.
- Posts shall be spaced a maximum of ten (10) feet apart at the barrier location or as recommended by the manufacturer if less than ten (10) feet and driven securely into the ground (minimum of 1 foot). The posts and fence shall be angled ten (10) degrees off vertical up-slope for stability.
- A trench shall be excavated approximately four (4) inches wide and six (6) inches deep along the line of posts and upslope from the barrier in accordance with manufacturer's recommendations.
- A wire mesh support fence shall be fastened securely to the upslope side of the posts using heavy duty wire staples at least one (1) inch long, tie wires or hog rings. The wire mesh shall extend into the trench a minimum of two (2) inches and shall not extend more than three (3) feet above the original ground surface.
- The filter fence fabric shall be installed on the upslope side of the wire mesh fence and shall be stapled, wired, or tied to the wire fence and eight (8) inches of the fabric shall be extended into the trench. The fabric shall not extend more than three (3) feet above the original ground surface.
- Filter fence fabric shall not be stapled to existing trees.
- The trench shall be backfilled and the soil compacted over the filter fence fabric.
- For installations on slopes less than 20%, slope lengths of 200 feet or less and around drainage inlets, the Contractor has the option to use fiber rolls in lieu of filter fence.
- Should the filter fence fabric decompose or become ineffective prior to the end of the expected usable life and the barrier is still necessary, the fabric shall be replaced promptly.

Filter fence shall remain in place for the complete duration of the project (all Phases of work) as necessary to conform to the Project Permit(s). All filter fence shall be routinely inspected and maintained at all times and on a continual basis for the duration of the Project, and is expected to be in good condition at the time the Notice of Completion is issued. Repair and or replacement of any damaged filter fence, upon discovery or as directed by the Engineer, shall be considered as included in the prices paid for this bid item of work, and no additional compensation will be allowed. At the conclusion of the project or as directed by the Engineer, TRPA and NDEP, all filter fence shall become the property of the Contractor and be completely removed from the project site and disposed of in conformance with the Contract Documents, Standard Specifications, and these Special Technical Provisions.

Fiber log (sediment roll) shall not be used in place of filter fence without prior acceptance and written consent of the Engineer. Filter fencing is considered a temporary erosion control measure or BMP. A fine of $100 per day will be levied against the Contractor for each day the Contractor delays in responding to the Engineer’s request to install new temporary erosion control devices and/or maintain existing temporary erosion control devices, in addition to any other fines levied by any other regulatory agency with no additional compensation allowed for.

160.05 Fiber Rolls (Sediment Roll). Work under this item shall consist of furnishing all labor, tools, equipment, and materials necessary to install, maintain, remove, and dispose of this temporary erosion control measure as required by the Project Plans, Contract Documents, Standard Specifications, these Special Technical Provisions, Project Permit(s), and TRPA and USFS Best Management Practices. **The Contractor shall submit a material specification for the fiber roll, for acceptance of the Engineer, prior to placement in the work.**

Fiber rolls will be certified weed free logs that consist of drainage filter made of curled aspen wood excelsior or coir and rolled into a cylindrical shape with a consistent width of fibers evenly distributed throughout the cylinder. Logs will be encased in 100% natural fiber biodegradable netting (no photodegradable or plastic materials). Weed free certification must be provided.

Fiber rolls with a diameter of 8 to 10 inches shall have a density of at least 1.1 lb/ft, and sediment logs with a diameter of 12-inches shall have a density of at least 3 lb/ft. Its basic purpose is to provide a flexible, lightweight, porous sediment control device demonstrating the ability to conform to terrain details, dissipate water velocity, and capture loose sediment. All fiber rolls shall be properly staked in place, except where its use is intended to be short term (daily operations) or reposition of the fiber roll will occur on a regular basis (i.e. active construction areas, trenching operations and windrows, temporary or active stockpiles, active areas for soil processing/screening operations, spill containment devices, etc.) as determined by the Engineer. In such instances where a fiber roll is not staked, it shall be weighted or secured in place using a sufficient number of gravel bags to control the flow of storm water and capture sediment.

The Contractor shall furnish, install, maintain, and remove when no longer required, all fiber rolls per the Manufacturer's directions, as shown on the Project Plans and as directed by the Engineer (where applicable to each Phase of the work), including but not limited to the following general requirements:

- Prior to fiber roll installation; the Contractor shall excavate a concave trench along the contour line, three (3) inches to five (5) inches deep. Soil excavated from the trench shall be placed on the uphill or flow side of the roll to prevent water from undercutting the roll.
- The Contractor shall place the fiber roll in the trench and stake on both sides of the fiber roll within eight (8) inches of each end and then at a maximum spacing of four (4) feet, using one (1) by two (2) inch stakes.
- When more than one fiber roll is placed in a row or check dam, the fiber rolls shall be overlapped in a horizontal configuration to provide a tight joint.

Fiber roll shall remain in place, where directed by the Engineer, for the complete duration of the project (all Phases of work) as necessary to conform to the Project Permit(s). All sediment logs shall be routinely inspected and maintained at all times and on a continual basis for the duration of the Project. Repair and or replacement of any damaged sediment log, upon discovery or as directed by the Engineer, shall be considered as included in the prices paid for this bid item of work, and no additional compensation will be allowed. At the conclusion of the revegetation "maintenance and bonding period" or where accepted to occur at an earlier date as directed by the Engineer, TRPA and NDEP, all sediment log shall become the property of the Contractor and be completely removed from the project site and disposed of in conformance with the Contract Documents, Standard Specifications, and these Special Technical Provisions.

Any sediment logs required or used in the work on a short term basis that are not permanently staked in place or are anticipated to be moved on a daily or routine basis (such as areas immediately adjacent to trench excavations, temporary stockpiles, active areas for soil processing/screening operations, spill containment devices, etc.) shall be considered as included in prices paid for the various contract items of work involved, and no additional compensation will be allowed.

Fiber rolls are considered a temporary erosion control measure or BMP. A fine of $100 per day will be levied against the Contractor for each day the Contractor delays in responding to the Engineer's request to install new temporary erosion control devices and/or maintain existing temporary erosion control devices, in addition to any other fines levied by any other regulatory agency with no additional compensation allowed for.

160.06 Watering/Dust Control

Work under this item shall consist of furnishing all labor, tools, equipment, and materials necessary to provide construction water for the control of dust generated by the Contractors activities as required by the Project Plans, Contract Documents, Standard Specifications, these Special Technical Provisions, Project Permit(s), and USFS and TRPA Best Management Practices.

The Contractor shall be responsible for dust control throughout all phases of construction. All federal, state, regional and local ordinances regarding dust control shall be complied with. The responsibility of obtaining the regulations and requirements and full compliance with such ordinances is solely that of the Contractor.

No chemical additives shall be permitted for any watering/dust controls operations.

If the Contractor desires to use water from Marlette Creek during construction, water must be pumped and used in accordance with any rules, regulations, and procedures as established by the US Forest Service. Water drafting sites should be located in areas that will avoid adverse effects to stream flows and depletion of pool habitat. If instream flows or water drafting sites are not sufficient due to a lack of water, water would be obtained from local municipal water hydrants. Water drafting sites will be reviewed by a hydrologist or fisheries biologist every two weeks during low flow periods and determinations made regarding adequate minimum flows. If flows are not adequate for instream needs, drafting will be discontinued. Use screening devices for water drafting pumps (Fire suppression activities are exempt during initial attack). Use pumps with low entry velocity to minimize removal of aquatic species, including juvenile fish, amphibian egg masses and tadpoles, from aquatic habitats. The following criteria should be used to avoid impacts:

- Drafting operations should be restricted to one hour after sunrise to one hour before sunset to avoid the use of lights that attract fish.
- Pumping rate shall not exceed 350 gallons per minute.
- The pumping rate shall not exceed ten percent of stream flow (estimated by pump operators) to ensure adequate downstream flow to support aquatic species.
- Drafting should occur in streams and pools with deep and flowing water; not streams with low flows and isolated pools.
- Pumping operations shall not result in obvious upstream or downstream pools.
- Each pumping operation shall use screens. The screen face should be oriented parallel to flow for best screening performance.

160.07 Sweeping
Work under this item shall consist of furnishing all labor, tools, materials, and equipment necessary to sweep all paved areas within the project site, and streets adjacent to the project site, and dispose of the swept materials in accordance with the Project Plans, Contract Documents, Standard Specifications, these Special Technical Provisions, Project Permit(s), and USFS and TRPA Best Management Practices. Tracking of sediment onto public streets shall be minimized by a combination of road sweeping and use of gravel construction entrance/exit areas designated on the Plans during soil hauling operations, during equipment transporting from one work area to another, and as necessary to keep the streets and other paved areas clear of soil and debris. Tracking control applies to streets within the project area as well streets adjacent to the project area that have the potential to be impacted by tracking from the Contractor's operations.

Affected streets shall be swept a minimum of three times daily (e.g. mid-morning, mid-afternoon, and at the end of the day) during soil hauling operations, during equipment transporting from one work area to another, and as necessary to keep the streets clear of soil and debris. The swept material shall be disposed of in accordance with the standard specifications, project permits and these Special Technical Provisions.

Sweeping is considered a temporary erosion control measure or BMP. A fine of $100 per day will be levied against the Contractor for each day the Contractor delays in responding to the Engineer's request to install new temporary erosion control devices and/or maintain existing temporary erosion control devices, in addition to any other fines levied by any other regulatory agency with no additional compensation allowed for.

160.08 Maintenance
The Contractor shall maintain all temporary erosion control measures, devices, and/or BMPs placed in the work, for the duration of the project. Maintenance includes all Manufacture's recommendations, and includes but is not limited to the following:

- Damage to any temporary erosion control devices and/or BMPs during the course of the project shall be repaired by the Contractor immediately upon discovery and at his expense.
- Temporary erosion control devices and/or BMPs shall be inspected routinely and immediately after each rainfall event and at least daily during prolonged rainfall events. Any required repairs shall be made immediately.
- Construction limit and tree protection fencing shall be inspected daily and repaired, secured, and/or replaced as necessary to maintain and preserve its intended purpose.
- All signage as required for the project shall be routinely inspected and repaired or replaced upon discovery of damage, vandalism, and/or missing parts.
- Should the filter fence fabric decompose or become ineffective prior to the end of the expected usable life and the barrier is still necessary, the fabric shall be replaced promptly.
- Should a sediment log decompose or become ineffective prior to the end of the expected usable life and the barrier is still necessary, the sediment log shall be replaced promptly.
- Any single or group of gravel bag(s) shall be replaced when the bag material is ruptured or when the yarn has failed, allowing the bag contents to spill out.
- Any stakes and/or rope used to secure a sediment log in place shall be routinely inspected and repaired as necessary if found to be loose or ineffective.

- Sediment deposits and other debris shall be removed when they reach approximately one-half the height of the sediment barrier (or as recommended by the Manufacture) and disposed of in a manner acceptable to the Engineer, USFS, NDEP, and TRPA.
- Any sediment deposits remaining in place after the temporary erosion control measure and/or BMPs is no longer required shall be removed and disposed of in a manner acceptable to the Engineer, USFS, NDEP, and TRPA.

160.09 Measurement and Payment.
"Filter Fence" shall be measured on a **per linear foot** basis along the top of the fence line, complete in place and accepted by the Engineer as conforming to all the requirements in the complete work. The linear foot price for "**Filter Fence"** shall include furnishing all labor, materials, tools, equipment, and incidentals and for doing all the work involved in installing the filter fence, including but not limited to, excavation, staking, burying, maintenance, and off-haul and disposal of excess materials, for a complete job in place to the lines and dimensions as shown on the Project Plans, and specified in the Contract Documents, Project Permits, Standard Specifications, these Special Technical Provisions, and as directed by the Engineer, and no additional compensation will be allowed.

"Construction Limit Fence" shall be measured on a **per linear foot** basis along the top of the fence line, complete in place and accepted by the Engineer as conforming to all the requirements in the complete work. The linear foot price for **"Construction Limit Fence"** shall include furnishing all labor, materials, tools, equipment, and incidentals and for doing all the work involved in installing the construction limit fence, including but not limited to, installing stakes and fence, maintenance, and off-haul and disposal of excess materials, for a complete job in place to the lines and dimensions as shown on the Project Plans, and specified in the Contract Documents, Project Permits, Standard Specifications, these Special Technical Provisions, and as directed by the Engineer, and no additional compensation will be allowed.

"Fiber Roll, As Directed" shall only be installed at the direction of the Engineer and shall be measured on a **per linear foot** basis along fiber rolls, complete in place and accepted by the Engineer as conforming to all the requirements in the complete work. The linear foot price for **"Fiber Roll, As Directed"** shall include furnishing all labor, materials, tools, equipment, and incidentals and for doing all the work involved in installing the fiber rolls, including but not limited to, communication with the Engineer, excavation of trench, installing stakes and rolls, maintenance, and off-haul and disposal of excess materials, for a complete job in place to the lines and dimensions as shown on the Project Plans, and specified in the Contract Documents, Project Permits, Standard Specifications, these Special Technical Provisions, and as directed by the Engineer, and no additional compensation will be allowed.

"Gravel Construction Access" shall be measured on a **per each** basis, complete in place and accepted by the Engineer as conforming to all the requirements in the complete work. The per each price for **"Gravel Construction Access"** shall include furnishing all labor, materials, tools, equipment, and incidentals and for doing all the work involved in installing the gravel construction access, including but not limited to, installing stakes and fence, maintenance, and off-haul and disposal of excess materials, for a complete job in place to the lines and dimensions as shown on the Project Plans, and specified in the Contract Documents, Project Permits, Standard Specifications, these Special Technical Provisions, and as directed by the Engineer, and no additional compensation will be allowed.

Full compensation for conforming to the provisions of this Section, not otherwise provided for, such as sweeping and dust control, shall be considered as included in prices paid for the various contract items of work involved, and no additional compensation will be allowed.

SECTION 165 – DEWATERING AND/OR DIVERSION

165.01 General

Work under this item shall consist of furnishing all labor, tools, equipment, and materials as necessary to dewater, divert and/or bypass any groundwater or surface waters and to maintain a reasonably dry excavation or general work area for the proper installation, construction, curing, grow-in, maintenance, and completion of any improvements and utility relocates, including revegetation/restoration activities, for a complete job in place as shown on the Project Plans, described in the Special Technical Provisions, the Appendix A "Dewatering and Diversion Plan, and Standard Specifications, or as directed by the Engineer.

Dewatering and/or Diversion operations as stated herein, or as directed by the Engineer, are required to be performed at any time and on a continual basis, for the duration of the project and any ensuing maintenance period, as necessary to install, construct, complete and maintain all project improvements.

In general, the Contractor should expect/anticipate that groundwater may be encountered at any time the existing ground is disturbed within the project area, as a majority of the project site is located within a TRPA land capability 2.

The Contractors attention is directed to the "Dewatering and Diversion Plan" (Appendix A). All dewatering and/or diversion operations and activities shall be in complete compliance with the Project Plans, Project Permits, the Standard Specifications, these Special Technical Provisions, and other applicable regulatory agency requirements.

The Contractor shall be responsible for the final design, installation, operation, maintenance and removal of any dewatering and/or diversion systems as required for completion of the contract work. The Project Plan sheets and Dewatering and Diversion Plan as provided as part of the Contract Documents provide a basis for, show, and describe dewatering scenarios and minimum requirements. **The Contractor shall accept the provided Preliminary Dewatering and Diversion Plan provided in the Plans and Appendix A or submit their own detailed Dewatering and Diversion Plan (including all necessary diagrams/ exhibits) to the Engineer for review and acceptance (by the Engineer, USFS, and NDEP) prior to commencement of any construction activities that may require dewatering and/or diversion operations.** The proposed Dewatering and Diversion Plan shall be prepared by a licensed Engineer in the state of Nevada, or qualified licensed Contractor (at discretion of the Engineer) that specializes in dewatering, filtration, pumping, and liquid handling operations. Information required to be submitted shall included but is not limited to the following:

- Any Sub-Contractor information and proof of experience
- Qualified operator of the system and equipment
- Access routes, pads, spill containment devices, and locations for equipment
- Sources for power supply and pump operation
- Dewatering/diversion system design performance measures for volume and pumping rates
- Pump equipment description, performance measures and manufacture's data sheets
- Intake and discharge locations, methods, and materials
- Disposal methods and any proposed treatment practices
- Provisions to provide back-up equipment and/or stage on-site

- Emergency plan to accommodate high flow flood events

If the Contractor plans to conduct any dewatering and/or diversion operations, he/she shall contact the Engineer for authorization, prior to starting the work at a given location. In the event the Contractor initiates dewatering and/or diversion operations without prior authorization of the Engineer, no payment for that work will be made.

165.02 Dewatering and/or Diversion for Channel Construction
Dewatering and/or diversion operations as necessary for, including but not limited to, the construction of the proposed creek channels, the culvert extension, construction of the ford crossing, and floodplain grading and other grading operations shall be as shown on the accepted Contractor's Dewatering and Diversion Plan, and in conformance with the Project Plans, and these Special Technical Provisions. Discharge of all captured and/or diverted waters shall be in conformance with all project permit regulations.

The excavation and general work area shall be sufficiently dry to allow for the proper construction of the channel, floodplain, pond, and associated structures, as shown on the Project Plans and described in these Special Technical Provisions. The location and depth of sumps and/or well points for pumping of ground water or surface water is at the discretion of the Contractor, but shall be reviewed and accepted by the Engineer prior to initiating the work involved. The dewatering operations shall also be sufficient to produce a stable sub-grade within the excavation or general work area as necessary for access of equipment and personnel to complete the work.

The Dewatering and Diversion operations shall adequately protect the work area(s) from creek flows, prevent erosion and discharge of sediment or pollutants, and divert "bypass" creek flows to designated stable discharge points downstream. Fish screens shall be installed as indicated on the Project Plans and described in the Dewatering and Diversion Plan. In the event there is a storm event which increases the flow of the creek beyond what can be handled by the Contractor's established creek diversion "by-pass" operations, the Contractor shall make provisions for and have equipment (i.e. pumps, piping, gravel bags, plastic sheeting, temporary dams, etc.) on standby to either provide additional pumping capacity to handle the additional flow, or provide for a complete gravity flow by-pass system. In addition, the Contractor shall make all provisions to provide adequate protection of the active work area(s), avoid flooding and inundation of excavation(s), divert runoff to stabilized downstream areas away from any active work site(s), and reduce and/or prevent erosion and discharge of sediment or other pollutants.

165.03 Dirt Bag Device. Work under this item shall consist of furnishing all labor, tools, equipment, and materials necessary to install, maintain, remove, and dispose of this temporary erosion control measure as required by the Project Plans, Contract Documents, Standard Specifications, these Special Technical Provisions, Project Permit(s), and TRPA Best Management Practices. **The Contractor shall submit a material specification for the 'Dirtbag' device, for acceptance of the Engineer, prior to placement in the work.**

Use of any 'Dirtbag' or other similar sediment control filter bag device used in coordination with pumping of sediment laden waters for discharge shall be as shown on the Project Plans and details and conform to the provisions of the Project Permits. The 'Dirtbag' shall be a commercially manufactured nonwoven geotextile fabric bag (polypropylene or equivalent) intended for such use, with a minimum grab tensile strength of 200 psi in any principal direction (ASTM D4632), and permittivity of 0.05 sec (ASTM D4491). For project area soils (source of sediment in waters) with more than 15% by weight

passing a No. 200 sieve the fabric shall have an apparent opening size between 50 and 140, and for project area soils (source of sediment in waters) with less than 15% by weight passing a No. 200 sieve the fabric shall have an apparent opening size between 20 and 50. The geotextile fabric material shall contain ultraviolet ray inhibitors and stabilizers to provide an expected usable life comparable to the anticipated construction period; ultraviolet stability shall exceed 70% after 500 hours of exposure (ASTM D4355). The 'Dirtbag' device shall have a fill spout large enough to accommodate a pump four (4) inch discharge hose and attachment straps to secure the hose in place. The Dirtbag' device shall be sized to accommodate the applicable flow rates and prohibit release of the target effluent. Location of any 'Dirtbag' device requires acceptance of the Engineer, equipment access for removal and off-site disposal, and the area shall be stable to prevent erosion. Placement of drain rock, fabric, or other suitable substance to create a stable discharge site is the responsibility of the Contractor. Any 'Dirtbag' device shall be fitted with straps strong enough for lifting and the device removed from the Project site and properly disposed of; **cutting open the device and leaving the captured sediment/fines in place is prohibited**. Removal and off-site disposal may be facilitated by placing the 'Dirtbag' device on pallets, crates, trailer, or some other small mobile device to dismiss the need for lifting the 'Dirtbag' device by straps.

165.04 Measurement and Payment

The **"Dewatering/Diversion"** bid item shall be measured on a **lump sum** basis, completed and accepted by the Engineer as conforming to all the requirements in the complete work. Payment for **"Dewatering/ Diversion"** shall be made at the lump sum price bid, with no additional compensation therefore. The **"Dewatering/Diversion"** bid item shall be paid in full if any dewatering operations are required and performed as part of the project work, as directed and accepted by the Engineer. No additional compensation will be allowed for if excess ground water or higher than expected creek flows are encountered and dewatering operations beyond what was anticipated by the Contractor is required for proper construction of the project improvements. All dewatering necessary for the proper installation, construction, and maintenance of the project improvements, including revegetation/restoration activities shall be included in this bid item(s).

Full compensation for conforming to the provisions of this Section, not otherwise provided for, shall be considered as included in prices paid for the various contract items of work involved, and no additional compensation will be allowed.

SECTION 170 – CLEARING AND GRUBBING AND TREE REMOVAL

170.01 Description

This section covers the construction methods involved in all clearing and grubbing, and tree removal operations as shown on the Project Plans, described in the Standard Specifications, these Special Technical Provisions, and/or as directed by the Engineer. Work under this item shall consist of furnishing all labor, tools, equipment, and materials as necessary to perform operations, including but not limited to, clearing and grubbing, topsoil salvage, tree removal, stump removal, and disposal of waste and other miscellaneous debris in accordance with the Project Plans, Project Permits, Standard Specifications, these Special Technical Provisions, and as directed by the Engineer.

170.02 Clearing and Grubbing

Clearing and grubbing shall consist of removing all objectionable and unacceptable natural or artificial materials from within the construction area project limits, and disposal of said material off the job site, in order to construct the project in a proper manner, in accordance with the Project Plans, Project

Permits, Standard Specifications, these Special Technical Provisions, as directed by the Engineer, and other applicable Local, Regional, State, and Federal requirements. This work includes but is not limited to any earthen material, organic growth, willow and alder clumps, trees and stumps (less than 6-inches diameter at breast height – DBH will be measured at 4.5-ft above the existing ground surface on uphill side of tree), man-made deposits, industrial waste, sludge or landfill, and other materials as designated by the Engineer. Existing structures, to be preserved, shall be protected and restored upon completion of the work.

Clearing and grubbing shall extend to the outer limits of excavation and fill slope lines and along temporary access roads, except where slopes are to be rounded in which case the areas shall extend to the outside limits of slope rounding. Within the limits of clearing, all stumps and roots 1-1/2 inches in diameter or larger, buried logs, and all other objectionable material shall be removed up to three (3) feet below the existing ground surface or subgrade, whichever is deeper. All existing vegetation, outside the areas to be cleared and grubbed, shall be protected from injury or damage resulting from the Contractor's operations. For typical protection of trees and other vegetation, see the Project Plans.

No live trees or downed logs or wood (equal to or greater than 6-inches diameter) shall be removed from the project site that are not identified and marked by the Engineer. In the event the Contractor removes any live trees or downed logs or wood (equal to or greater than 6-inches diameter) not marked by the Engineer, the Contractor shall be solely responsible for any and all fines and/or penalties levied to the Contractor, Engineer, or USFS in association with the removal.

For the purposes of this Project, willow and alder clump vegetation shall not be considered singular trees as part of the tree removal bid item work. Any willow/alder material shall be removed and disposed of within the project limits/areas of disturbance (clearing and grubbing limits as shown on the Project Plans), unless specifically directed to be protected in place of as part of the work. Any removal and disposal of existing willow/alder vegetation shall be considered as part of the clearing and grubbing efforts, and no additional compensation shall be allowed for.

Topsoil, Sod, and Organic Materials

During clearing and grubbing, the Contractor shall salvage and stockpile topsoil and sod for reuse in the project area in accordance with Section 260, “Revegetation,” of these Special Technical Provisions.

Harvest sod from the footprint of the restoration area as shown on the plans and as staked in the field. Do not stockpile more than 30 calendar days.

Use a low weight bearing equipment ASV-POSI TRACK SKID STEER with a front-end bucket (front end loader or tractor with bucket) to salvage and transport sod and minimize damage to native vegetation remaining in place along temporary maintenance access road.

Salvaged sod shall consist of cohesive, contiguous material of sedges *(Carex spp*.) and Baltic rush (*Juncus balticus*), and other wetland and mesic meadow species, as shown on the plans and as staked in the field by the Engineer. Remove in as large a unit as practicable, resulting in clean, vertical edges. Sod shall be scalped from the original ground surface to a depth of no less than eight (8) inches, as measured from the root crown. Do not stack. If stored, sod shall be placed with roots down and edges snugly adjoining adjacent sections in a shaded facility for a maximum time of one month; minimize storage and handling. Maintain as a viable growth media and do not let material dry out during handling and storage (water a

minimum of two times per day). Re-plant concurrent with channel construction to the greatest extent possible and as directed by the Engineer.

Material that cannot be moved in a contiguous manner shall be salvaged, stockpiled, and re-applied as organic matter as directed by the Engineer.

Topsoil shall not be stockpiled for a period greater than two (2) weeks or greater than three (3) feet in height unless accepted by the Engineer. Topsoil shall be re-applied within the project area in accordance with Section 260, "Revegetation," of these Special Technical Provisions. All suitable organic materials removed during the clearing and grubbing operation including, but not limited to, pine needles, leaves, duff, trees smaller than six (6) inches DBH, stumps, and suitable roots shall be stockpiled and used for revegetation/restoration treatments. The Contractor shall make allowances for chipping larger organic materials such as trees, suitable roots, branches, and stumps so that these materials can be used for project revegetation/restoration efforts.

The Contractor shall not stockpile any vegetation or other debris generated as a result of the clearing and grubbing or tree removal operations that is not suitable for use in revegetation efforts. All unsuitable vegetation or other debris shall be removed from the job site by the end of each working day.

170.03 Tree Removal

Work under these bid items shall consist of furnishing all labor, tools, equipment and materials necessary for the removal of trees equal to or larger than 6-inches in diameter, measured at an elevation of 4.5-feet above the prevailing existing ground surface on uphill side of tree (a.k.a diameter at breast height - DBH). Trees equal to or larger than 6-inches DBH to be removed are schematically shown on the Project Plans and will be conspicuously marked in the field by the Engineer and FS forester (**no tree shall be removed unless marked in the field**). Tree removal shall include the removal of associated stumps and roots necessary for a complete removal of the tree and its appurtenances, and backfilling the remaining hole with native material, as directed by the Engineer.

The quantity (contract value) of trees to be removed, as shown on the Project Plans, may be more or less than the contract amount, as determined by the Engineer. Final quantities may fluctuate based on field conditions and actual construction staking, layout, and grading limits at the time of construction. All trees necessary for removal, as determined by the Engineer and TRPA staff forester, will be identified and conspicuously marked in the field for removal.

Prior to timber removal operations all associated temporary erosion control measures and BMPs, and traffic control must be in place, in accordance with the Project Permit(s), Standard Specifications and these Special Technical Specifications.

Trees shall be felled to minimize disturbance to surrounding facilities, structures, vegetation and traffic flow on roadways. The Contractor shall make all efforts to minimize any damage to trees and/or root

The Contractor shall set aside specific materials (trees, stumps, slash, etc.) onsite for use and placement in the work and/or revegetation treatments. All such materials, and quantities, will be clearly identified and marked by the Engineer prior to the start of clearing and grubbing, and tree removal operations. Contractor is responsible for complete site cleanup, including slash disposal. No slash may be stored or burned on site. All wood products must be removed from the site prior to resale.

No trees (equal to or greater than 6-inches diameter) shall be removed from the project site that are not identified and marked by the Engineer. In the event the Contractor removes any trees (equal to or greater than 6-inches diameter) not marked by the Engineer, the Contractor shall be solely responsible for any and all fines and/or penalties levied to the Contractor, Engineer, or the US Forest Service in association with the removal.

170.04 Stump Removal

Work under this item shall be considered part of the clearing and grubbing work and shall consist of furnishing all labor, tools, equipment and materials necessary for the removal and disposal of stumps depicted on the project plans, or as directed by the Engineer. Stump removal as described herein will only consist of stumps to be removed that are not directly associated with the removal of a tree (as defined herein - tree removal bid items and prices include the cost of removing the associated stump).

Trees and stumps designated for removal shall be removed to at least two (2) feet below finished grade. Ground trees and stumps intended for use as wood chip mulch shall conform to the requirements of these Special Technical Provisions. Trees and stumps not suited as wood chip mulch or for use in project improvements shall be removed and appropriately disposed of outside the project limits. The Engineer and Revegetation Specialist will determine which trees and stumps are suited for use as wood chip mulch and for use in project improvements. The Contractor shall schedule an inspection of stumps and trees with the Engineer, at least 10 days prior to the Contractor scheduling wood chipping operations, for a determination of what can be used as mulch.

Compensation for the removal of trees and stumps less than six (6) inch diameter and stumps greater than six (6) inch diameter, as necessary for construction of the various items of work as staked by the Engineer, shall be included in the clearing and grubbing bid item and no additional compensation shall be made therefore.

170.05 Work Outside of Stated Limits

The Contractor shall not, and no payment will be made to the Contractor, for clearing and grubbing outside the stated limits as shown on the Project Plans, or as described in these Special Technical Provisions, unless such work is authorized by the Engineer.

170.06 Protection of Plants

Trees and plants that are not to be removed shall be fully protected from injury by the Contractor at his/her expense. Trees shall be removed in such a manner as not to injure standing trees, plants, and improvements which are to be preserved. The Contractor shall remove tree branches under the direction of the Engineer, in such a manner that the tree will present a balanced appearance.

Scars resulting from the removal of branches shall be treated with a heavy coat of a tree sealant accepted by the Engineer and Revegetation Specialist. Construction limit fence shall be installed around all trees to be protected near excavation limits at the dripline of the tree as shown on the Project Plans. If large roots of protected trees are encountered during excavation activities, work shall cease in this area and the Engineer shall be notified. Work shall commence as directed by the Engineer.

170.07 Removal and Disposal of Materials

All materials scheduled or specified for removal and disposal shall be removed and hauled from the site at the Contractor's expense, unless otherwise specified, and disposed of outside of the Lake Tahoe Basin

in accordance with TRPA ordinances. The construction area shall be left with a neat and finished appearance.

170.08 Measurement and Payment
"Clearing and Grubbing" (including trees under 6-inch DBH) shall be measured on a **per square foot** basis, completed and accepted by the Engineer as conforming to all the requirements in the complete work. The per square foot price for **"Clearing and Grubbing"** shall include furnishing all labor, materials, tools, equipment, and incidentals and for doing all the work involved in the clearing and grubbing of the project site as shown on the plans and as specified in the Project Plans, Contract Documents, Project Permits, Standard Specifications, these Special Technical Provisions, and as directed by the Engineer including the removal and disposal of all the resulting materials from the Tahoe Basin. The per square foot area is based on the disturbance area shown on the plans. If the Contractor disturbs additional area without the approval of the Engineer, no additional payment is allowable for this bid item.

"Tree Removal and Stockpile" shall be measured on a **per each** basis, completed and accepted by the Engineer as conforming to all the requirements in the complete work. The per each price for **"Tree Removal and Stockpile"** shall include furnishing all labor, materials, tools, equipment, and incidentals and for doing all the work involved in removing all trees as marked and stockpiling the trees as necessary for the construction of in stream structures shown on the plans and as specified in the Project Plans, Contract Documents, Project Permits, Standard Specifications, these Special Technical Provisions, and as directed by the Engineer, including the removal and disposal of all the materials not to be used in the project from the Tahoe Basin.

"Salvage Sod, Stage, and Maintain" shall be measured on a **per square foot**, completed and accepted by the Engineer as conforming to all the requirements in the complete work. The per each price for **"Salvage Sod, Stage, and Maintain"** shall include furnishing all labor, materials, tools, equipment, and incidentals and for doing all the work involved in removing the sod as marked by the Engineer and stockpiling and maintaining the sod per Section 260 of these Special Technical Provisions and as necessary for use in the Water's edge revegetation treatment and as specified in the Project Plans, Contract Documents, Project Permits, Standard Specifications, these Special Technical Provisions, and as directed by the Engineer.

Full compensation for conforming to the provisions of this Section, not otherwise provided for, shall be considered as included in prices paid for the various contract items of work involved, and no additional compensation will be allowed.

SECTION 175 – REMOVAL OF EXISTING MICELLANEOUS ITEMS

175.01 General. Work under this section shall conform to the project permits, Plans, Contract Documents, Standard Specifications, these Special Technical Provisions, and USFS Best Management Practices

175.02 Remove Existing Culvert Apron, Headwall, and Wingwall
Work under this section shall include the removal of the culvert apron, headwall, and wingwall as required to properly construct the design, as shown on the Project Plans, described in the Standard Specifications, these Special Technical Provisions, and/or as directed by the Engineer. The existing wingwall, headwall, and apron dimensions are not field verified, but the footing/cutoff wall depth should be assumed to match the NDOT Standard Detail for RCB Culvets.

Any materials removed in conformance with this provision shall become the property of the Contractor and shall be removed and disposed of by the Contractor in conformance with the Standard Specifications and these Special Technical Provisions.

175.02 Remove Existing Manmade In-Channel Structures
Work under this section shall include removal and disposal of manmade in-channel structures as called out and shown on the Project Plans but not including the section of concrete box culvert for the culvert extension or the corrugated metal pipe at the **"Ford Crossing"**. Manmade in-channel structures include tires, rock gabions, pipes, and a metal flume. Any materials removed in conformance with this provision shall become the property of the Contractor and shall be removed and disposed of by the Contractor in conformance with the Standard Specifications and these Special Technical Provisions.

175.03 Measurement and Payment
Payment for **"Remove Existing Culvert Apron, Headwall, and Wingwall"** shall be measured on **a lump sum** basis, complete in place and accepted by the Engineer as conforming to all the requirements in the complete work. The contract lump sum price for **"Remove Existing Culvert Apron, Headwall, and Wingwall"** shall include furnishing all labor, materials, tools, equipment, and incidentals and for doing all the work including but not limited to removing subsurface concrete footings and at surface concrete for a complete job in place as shown on the Project Plans, and specified in the Contract Documents, Project Permits, Standard Specifications, these Special Technical Provisions, and as directed by the Engineer, and no additional compensation will be allowed.

Payment for **"Remove Existing Manmade In-Channel Structures"** shall be measured on a **lump sum** basis, complete in place and accepted by the Engineer as conforming to all the requirements in the complete work. The contract lump sum price for **"Remove Manmade In-Channel Structures"** shall include furnishing all labor, materials, tools, equipment, and incidentals and for doing all the work including but not limited to removing debris, water quality control measures, and off-haul and disposal of excess materials, for a complete job in place as shown on the Project Plans, and specified in the Contract Documents, Project Permits, Standard Specifications, these Special Technical Provisions, and as directed by the Engineer, and no additional compensation will be allowed.

SECTION 200 – GRAVEL, COBBLE, ROCK, BOULDER & OTHER AGGREGATES

200.01 General. Work under this item shall consist of furnishing all labor, tools, materials, and equipment necessary to furnish and place gravel, cobble, rock, sand aggregate, and other aggregates in the work, including but not limited to, channel bed material, boulder step pools, aggregate base courses, bedding and backfill, and general rip-rap as indicated on the Project Plans, described in these Special Technical Provisions, and directed by the Engineer, in conformance with the Contract Documents, Project Permits, Standard Specifications, and these Special Technical Provisions.

The limits of loose aggregate and aggregate base course placement as indicated on the Project Plans are approximate, and the exact limits of placement shall be determined in the field by the Engineer. All aggregates used in the work for aggregate base courses, bedding and backfill, and general rip-rap shall be in strict conformance with the Standard Specifications, and other applicable provisions found elsewhere in these Special Technical Provisions.

All gravel, cobble, rock, sand aggregate, and other loose aggregate used in the work for proposed creek channel, boulder step pools, and all other areas requiring said materials shall be in conformance with these Special Technical Provisions, and other applicable provisions of the Standard Specifications. **All gravel, cobble, rock, sand aggregate, and other loose aggregate used in the work for proposed creek channel and in boulder step pools, including imported and reused rock, shall be thoroughly washed outside of the confines of the proposed stream, pond, and floodplain in a location approved by the engineer so that each material runs clear when water is applied.**

All stone, aggregate materials, and soils imported to the site shall be from a certified "Weed Free" source approved by the US Forest Service - LTBMU. Certified Weed Free Sources can be provided by the Engineer upon request.

All loading, transport, temporary stockpiling, on-site hauling, excavation, preparation of sub-grade, placement, embedment, backfill, compaction, clean-up, and off-haul and disposal of excess materials needed to install all gravel, cobble, rock, boulder, sand aggregate, and other aggregates where incorporated in the work shall be considered as included in the applicable bid item unit price, and no additional compensation will be allowed.

All aggregate materials generated on-site and meeting the quality requirements as stated in Section 200, "Gravel, Cobble, Rock, Boulder & Other Aggregates" of these Special Technical Provisions may be incorporated in the work upon acceptance of the Engineer prior to placement; any such material that is rejected for placement in the work shall be removed and disposed of in conformance with the provisions found elsewhere in these Special Technical Provisions, and the Standard Specifications. Use of said aggregate material in the work shall be considered as included in prices paid for the various contract items of work involved; and no additional compensation will be allowed for.

200.02 Submittals

The Contractor shall submit certificate(s) and other material testing data as necessary to validate the source of the gravel, cobble, rock , sand aggregate, and other aggregate materials and its conformance with the Standard Specifications and these Special Technical Provisions. Include all applicable test results for specific gravity, resistance to degradation, absorption, durability index, and soundness (as described elsewhere in these Special Technical Provisions). Samples of loose stone aggregates shall be submitted to the Engineer a minimum of ten (10) working days prior to large-scale delivery to the project site or placement in the work, for review and acceptance of color and material.

All aggregate materials generated on site shall be reviewed and accepted by the Engineer, prior to placement in the work. Visual evaluation of the source, samples, suitable certificates and material testing data sheets, and service records may be used to determine the acceptability of any aggregate materials imported or generated on-site. The Engineer reserves the right to reject said materials.

200.03 Quality Requirements for Loose Stone Aggregates.

The Contractor shall use stone (i.e. gravel, cobble, rock, etc.) that is sound and durable against disintegration under conditions to be met in handling and placing, and is hard and tenacious and otherwise of a suitable quality to ensure permanency in the specified kind of work. All applicable stone materials shall meet the requirements stated herein and conform to the following test requirements.

	Requirement	Test Method
Apparent specific gravity, minimum	2.5	ASTM C-127-59
Abrasion, maximum percent	45	ASTM C-535-65
Freeze-thaw loss, maximum percent After 12 cycles	10	AASHTO 103 Procedure A

Stone shall be of such shape to form a stable protection structure for the required section or feature. Flat or elongated shapes will not be accepted unless the thickness of the individual pieces is at least 1/3 of the length. Stones shall be sound, durable, hard, resistant to abrasion and free from laminations, weak cleavage planes, and the undesirable effects of weathering. It shall be of such character that it will not readily disintegrate from the action of air, water, or the typical conditions experienced during handling and placing. All aggregate material shall be clean and free from deleterious impurities, including alkali, earth, clay, refuse, and adherent coatings.

Stone materials shall be of a native nature to the Tahoe Basin (i.e. of similar color and texture to that generally found within the Tahoe Basin and in particular the project area Stateline, Nevada and vicinity). All gravel, cobbles, and boulders used in the proposed stream channel shall be smooth and rounded in shape as noted above and of a natural earth tone color/hue that blends with the surrounding environment (or generally described as "round and brown").

200.04 Sand Requirements and Standards

Sand shall be medium to coarse sand and shall be free of organic debris and other deleterious substances. The sand shall have a minimum specific gravity of 2.5 and shall be sub-rounded to rounded. Volcanic cinder material shall not be acceptable. Samples of the proposed sand shall be submitted to the Engineer for approval 10 days prior to placement. No sand finer than 75µm is allowable. The mineral materials required for the "sand" as designated on the Project Plans for inclusion in the proposed creek channel work shall generally meet the following gradation requirements (per ASTM C136):

Sieve Size	Percent passing by weight
3/8"	100
#4 (4.75mm)	75.0 (max)
#8 (2.36mm)	50.0 (max)
#30 (0.6mm)	5.0 (max)
#100 (0.15mm)	2.5 (max)
#200 (75µm)	2.0 (max)

200.05 Well Graded Gravel Mixture Requirements and Standards

Well Graded Gravel Mixture shall be "round and brown" as described in Section 200.03 and conform to the gradation requirements below:

Size	Percent finer than by Weight
3"	100
2"	70-90
3/8"	35-70
0.15 inches	0-35

Where identified on the Project Plans, the well graded gravel mixture shall be a well graded blend of the sizes as indicated, uniformly and evenly distributed by weight. Material shall be washed and it is recommended that gradation and washing is completed off site.

200.06 Channel Bed Material
Channel Bed Material shall be a mix of 50 percent of the Well Graded Gravel Mixture in Section 200.05 and 50 percent of the Sand in Section 200.04.

200.07 Cobble Bed Material and Ford Rock
Cobble Bed Material and Ford Rock shall be smooth and round in nature and within 1 inch of the size specified on the plans in each direction. Cobble and Ford Rock may be placed with 25 percent mix of Well Graded Gravel Mixture in Section 200.05.

200.08 Boulders and Ford Stepping Stones
Boulders shall be within 3 inches of the size specified on the plans in each direction. Boulders placed within floodplains or channels should be smooth and round in nature. Ford stepping stones may be flat on 1 or 2 sides and may also be elongated as long as they can be placed to create a stable stepping surface for foot traffic.

200.09 Placement
The placement of any sand, well graded gravel mixture, or rock strictly by dumping shall not be permitted. Hand and/or mechanical adjustments/placement of the stone materials are expected in order to meet the requirements stated herein.

All stone products shall be placed to follow the lines and grades shown on the Project Plans. Prevent the contamination of stone features, channel bed material, and other designated
rock fills by soil and other earthen materials during excavation, placement, and/or backfill. All stone features shall be blended with adjacent rock areas and grades, by tapering margins, mixing rock color, and keying into and around existing bedrock, rock, soils, and vegetation. The Engineer will direct the Contractor in placement of well graded gravel mixture for construction of designated stone features and proposed creek channel and filled pond, to attain a natural appearance and complete job in place as shown on the Project Plans and described in these Special Technical Provisions. Exact elevations and horizontal locations of the stone materials and features as shown on the Project Plans may be slightly adjusted in the field by the Engineer, with no additional compensation allowed for.

All channel and pond bed material shall be placed in the locations as shown on the Project Plans in such a manner to produce a relatively uniform graded mass. Place material to thicknesses shown on the Project Plans and uniformly distribute stone and sand materials to produce the required gradation of rock and wheel-roll into place (or compact by other methods) to create a firm and stable structure, and meet finished grade as shown on the Project Plans. Placement of channel and pond bed material shall be conducted in a manner as not to produce a downstream turbidity or other pollutant discharge in violation of the project permit(s) or other water quality standards.

The segregation of mixed stone materials may occur during transport, dumping, on-site hauling, etc. The Contractor shall distribute all stone materials to produce the required gradation of rock. Routine control of gradation will be by visual inspection.

200.10 RipRap. In addition to the requirements of Section 705 of the Standard Specifications, riprap stone shall be of such shape to form a stable protection structure for the required section. Stones shall be sound, durable, hard, resistant to abrasion and free from laminations, weak cleavage planes, and the undesirable effects of weathering. It shall be of such character that it will not disintegrate from the action of air, water, or the conditions experienced during handling and placing. Stone shall additionally be of native nature to the Tahoe Basin, of similar color and texture to that found within the Tahoe Basin and in particular the project area, and samples shall be provided to the Engineer for review and approval for use, prior to placement of any stone. All material shall be clean and free from deleterious impurities, including alkali, earth, clay, refuse, and adherent coatings. Visual evaluation of the source, suitable tests and service records may be used to determine the acceptability of the stone. Routine control of gradation will be by visual inspection.

200.11 Measurement and Payment. Full compensation for furnishing all labor, materials, tools, equipment, and incidentals for the materials in this section, complete in place as shown on the Plans, as specified in the Standard Specifications, these Special Technical Provisions, and as directed by the Engineer, should be incidental to the other construction items; no additional compensation will be allowed.

SECTION 205 –EARTHWORK

205.01 General

Work under this item shall consist of furnishing all labor, tools, equipment, and materials necessary for stream and floodplain excavations and fills, culvert extension, temporary access road construction and decommissioning, local borrow native soils, import of fill material, salvage topsoil, imported topsoil, existing sub-grade scarification and preparation, rough grading, compaction, finish grading, loading, transport, onsite hauling, off-site hauling, temporary stockpile, off-site stockpile, processing/conditioning, screening, placement, and disposal/salvage of unsuitable or surplus materials, for all the contract work items involved or delineated as excavation, earthwork, or grading as shown on the Project Plans, and as described in the Standard Specifications and these Special Technical Provisions. All excavations, fill, earthwork, and associated grading shall be made true to the lines and grades as shown on the Project Plans, staked by the Engineer, and verified by the Engineer, and shall be so constructed as to avoid removing or loosening any material outside the required slopes and grading limits.

Attention is directed to Section 204, “Unclassified Borrow”, of the Standard Specifications.

Because of the nature of the project, careful excavation, backfill, and grading are mandatory. The proposed contours, representative cross sections, and applicable typical cross section as shown on the Project Plans represent the intended shape of the land but the Contractor shall take into account that the proposed channels, proposed fills, floodplain grading areas, slopes, grade breaks, etc., shall be constructed and graded to natural shapes that transition smoothly to adjacent features and grades. As part of the scope of this item of work, the Contractor shall work under the direction of the Engineer to create a natural-looking finished grade surface. The Contractor may be directed in the field to make minor modifications to the depth of cuts, heights of fills, angle of slopes, and other contour grading to achieve a natural appearance, and the desired functioning of the system and proposed improvements. Additionally, the Contractor may be field directed, by the Engineer, to slightly modify the alignment or elevation of the proposed improvements to account for variations in substrate or topography, and true field conditions present at the time of construction. Compensation for these potential directives and

minor field modifications, as noted above, shall be considered as included in prices paid for the various contract items of work involved, and no additional compensation will be allowed.

All finished areas with cut and/or fill slopes shall be graded as indicated on the Project Plans, staked in the field, and directed by the Engineer. The Contractor shall employ excavation and/or placement methods that does not disturb or damage other work. Areas that are shown to not have any excavation or grading shall be protected and remain undisturbed to protect the existing soil profile and vegetation cover.

Cobbles and boulders may be encountered during grading and could be incorporated in the project f needed. If these oversize particles conform to the description of Rock or Channel Bed Materials as described in Section 200 of these Special Technical Provisions, they should be set aside for other applications on the project site as accepted and allowed per direction of the Engineer.

During the course of the project (all phases) any damage to previously installed and accepted work including but not limited to any creek channel, culverts, decommissioned roads, and floodplain areas shall be repaired/replaced at the Contractor's expense. Furthermore, the Contractor shall protect all previously installed revegetation treatments and irrigation equipment; and repair/replace all areas that are damaged as a result of the Contractors operations. The Contractor shall reshape, grade, and re-compact (where applicable) any areas subjected to displacement from vehicular traffic. The Contractor is responsible to locate, identify, and protect all existing utilities from damage.

205.02 Miscellaneous and Temporary Grading and Excavation

Work under this item shall consist of providing all labor, tools, materials, and equipment necessary to perform minor excavation, temporary excavation and finish grading as directed by the Engineer. Miscellaneous and temporary excavation and grading includes excavation, grading, fill, compaction, and disposal of excess materials as necessary to construct the project improvements, maintain prevailing grades, and create drainage swales to ensure correct flow paths and positive drainage is maintained within the finished project site. In addition, miscellaneous grading and excavation shall include finish/contour grading within the project area to create natural shapes that transition smoothly to adjacent features, grades and slopes and generally provide for a natural appearance, in accordance with the Project Plans, Standard Specifications, these Special Technical Provisions, and as directed by the Engineer. All such miscellaneous excavation and grading, including detailed finish grading as directed by the Engineer in the field to produce a natural finish, shall be considered as included in prices paid for the various contract items of work involved, and no additional compensation will be allowed.

Construction of temporary construction access roads as shown on the plans consists of establishing routes to adequately construct the project. Temporary access road alignments and grades as shown on the plans are suggestions for the contractor. However, the contractor can submit alternative routes for approval by the Engineer. Quantities shown on the plans for constructing temporary access roads are for bidding purposes and actual quantities may vary depending on the final routes established. To establish the access roads as shown on the plans it is estimated that a total of 300 BCY (cut and fill) is required to establish the grades as shown for 10,500 SF of temporary access roads.

205.03 Creek and Floodplain Grading

Clearing and grubbing, excavation, sub-grade scarification and preparation, rough grading, fill, compaction, finish grading, and disposal/salvage of unsuitable or surplus materials within the

designated areas of the stream and floodplain shall produce a finished surface to the lines and grades as shown on the Project Plans, and all work shall be in conformance with the applicable sections of these Special Technical Provisions.

The Contractor is only permitted to use "low impact equipment" within the floodplain/SEZ areas for completion of this work. The Contractor's attention is directed to Section 120, "Project Permits."

Any fill materials used in the work shall be in conformance with the Standard Specifications, these Special Technical Provisions, and at a minimum shall not exceed optimum moisture content, and be free of stones or lumps exceeding 3 inches in greatest dimension, organic matter, or other unsatisfactory material that may restrict compaction requirements.

Following completion of the excavation and rough grading work within the floodplain grading areas, and prior to placement of any topsoil, the Engineer will inspect the work site subgrade (using a soil probe or penetrometer) for any areas of excessive compaction. Upon discovery the Engineer will mark the limits of all areas, and the Contractor shall loosen/decompact the areas in accordance with the applicable provisions of Section 260, "Revegetation" of these Special Technical Provisions.

Placement of topsoil and revegetation treatments shall be as specified elsewhere in these Special Technical Provisions, or as directed by the Engineer.

205.04 Local Borrow (Native Fill)

Selected material and other local borrow native earthen material encountered and/or generated on-site in excavation within the project limits may be used as backfill where shown on the Plans for fill slopes or as specified in the Special Technical Provisions, the Standard Specifications, or as directed by the Engineer.

All fill materials used in the work shall be in conformance with the Standard Specifications, these Special Technical Specifications, and at a minimum shall not exceed optimum moisture content and be free of stones or lumps exceeding 3 inches in greatest dimension, organic matter, or other unsatisfactory material that may restrict compaction requirements. **Any native, local borrow, or imported borrow soils used for backfill shall be accepted by the Engineer prior to placement**. Any screening operations and processing of soils as required for conformance with this section shall be considered as included in prices paid for the various contract items of work involved, and no additional compensation will be allowed. Stockpiling of soils and screening operations should occur at a staging area with appropriate BMPs installed.

Local borrow (topsoil, and underlying native earthen soils) generated on-site in excavation within the project limits may be placed in the fill only in locations as specified on the Project Plans and described in these Special Technical Provisions. Topsoil excavated and properly salvaged within the grading limits may be considered as a select material or local borrow only for the purpose of placement in areas to be planted or revegetated as specified elsewhere in these Special Technical Provisions, or as directed by the Engineer.

The Contractor shall perform and/or submit all material testing reports and other data as necessary to provide the Engineer with established laboratory values for optimum moisture and maximum dry density, for any local borrow native fill requiring density testing. The Contractor is hereby advised that

some of the on-site soils may be saturated and will require drying prior to placement in order to achieve the specified degree of compaction.

205.05 Import

Importing of earthwork fill material, if necessary or required to meet the grades and elevations shown on the plans, shall be considered included in the Contractor's bid for the various items of work involved and no additional compensation will be made, therefore. The Contractor shall notify the Engineer of the borrow site location at least 72 hours in advance and provide an adequate sample size (~ 0.5 cubic foot) so the Engineer can verify the suitability of the material. All imported materials shall be proposed by the Contractor in writing in accordance with the submittal requirements of these Special Provisions and the Standard Specifications. The Contractor shall perform and/or submit all material testing reports and other data as necessary to provide the Engineer with established laboratory values for optimum moisture and maximum dry density, for any imported material requiring density testing. Furthermore all imported materials must come from certified weed free sources.

205.06 Fill Slopes

Earthen materials used for native fill and import fill shall be in conformance with the requirements stated herein. Placement, layering, compaction, and locations of the fill materials to create a distinct soil profile to produce a finished grade surface shall be as shown on the Project Plans, described herein, and as directed by the Engineer.

Execution of Work

Prior to the placement of fill materials the exposed sub-grade should be cleared of excessively loose or disturbed soil and stone materials, large woody debris, vegetation, organic matter, and other waste materials (i.e. clearing and grubbing). No fill should be placed on frozen ground; and placement of fill on or in standing water will not be allowed. If soft, wet, or pumping subgrade soils are present, the required minimum level of compaction for the initial fill lift shall be eighty-five percent (85%) of the soil's maximum dry density as determined in accordance with ASTM D 1557. Construction traffic on soft, wet, or pumping subgrade soils shall be reduced to a minimum. The intent of the reduction is to limit the amount of construction traffic that could lead to further deterioration and destabilization of the exposed subgrade and to build a more stable pad upon which to place subsequent fill lifts.

Fills shall be placed in loose lifts not to exceed eight (8) inches and shall be compacted to not less than ninety percent (90%) of the soil's maximum dry density as determined in accordance with ASTM D 1557. Pumping or deflection within fill lifts is acceptable as long as the required level of compaction is being met and does not preclude achieving adequate density in subsequent lifts. No frozen fill should be placed. Placement and compaction of the channel fills should be accomplished under full-time observation from the Engineer. Testing of compaction will be conducted throughout the process. Fill shall be benched into existing slopes where sidewall slopes exceed 4:1 (V:H).

Materials

Soils used as Native Fill should consist of native materials generated during construction operations following associated clearing and grubbing and sod or topsoil salvage. Native fill generated on site should be relatively free (i.e. less than 5 percent) of organics. Import fill, if required or desired for use, shall be free of organics and other perishable material and meet the requirements as noted below. For placement in the work, all native fill or import shall be free of construction debris and shall meet the following requirements:

Channel Fill Requirements	
Sieve Size	**Percent Passing (by dry weight)**
6”	100
4”	90 - 100
¾”	70-100
No. 40	10-85
No. 200	8-45
Liquid Limit	60 max.
Plasticity Index	30 max.

The Contractor shall perform and submit material testing reports and other data as necessary to validate the source and makeup of import fill selected for placement in the work, and to provide the Engineer with established laboratory values for optimum moisture and maximum dry density, for any fill material requiring density testing. Any proposed import fill that deviates from the criteria stated herein, shall have written acceptance from the Engineer prior to import or placement in the work. All import fill must be certified weed free.

205.07 Topsoil Placement

Placement of salvaged topsoil to the required thickness, including any associated finish grading and compaction, shall produce a finished surface to the lines and grades as shown on the Project Plans, and all work shall be in conformance with the applicable sections of these Special Technical Provisions. The salvaged topsoil shall be placed to blend with the adjacent project improvements and floodplain/slope areas to create a generally smooth, natural appearance (including minor variations) as directed by the Engineer; and to create a stable area to receive all proposed revegetation treatments as specified elsewhere in these Special Technical Provisions.

Prior to any topsoil placement the underlying subgrade shall be left rough as directed by the Engineer. Topsoil shall be placed to uniform depths as indicated on the Project Plans.

Following completion of excavations, fill, grading, compaction, placement of aggregates, and construction of all proposed improvements as shown on the Project Plans as required prior to placement of any topsoil, the Contractor shall schedule for a site inspection by the Engineer (minimum of 4 working days notice required) in order to inspect the subject work area for conformance with the contract documents, plans, and specifications. **Placement of topsoil shall not commence until the Engineer has inspected and accepted the subject work area**. In addition, the base soils will be inspected (using a soil probe or penetrometer) for any areas of excessive compaction. Upon discovery the Engineer will mark all areas/items required for corrective measures and mark the limits of areas where soils shall be loosened/decompacted in order to commence placement of topsoil and subsequent installation of the revegetation treatments in accordance with the applicable provisions of Section 260, “Revegetation” of these Special Technical Provisions.

Salvaged topsoil shall only be generated from the project site (within the limits of grading) as specified in Sections 170 “Clearing and Grubbing and Tree Removal” and 260 “Revegetation” of these Special Technical Provisions.

205.08 Unsuitable Soils, Surplus Earthen Material, and Stockpiles
Unsuitable soils, surplus soils, and other excess earthen materials shall be removed and disposed of in accordance with all local, state, and federal regulations from the project site as a part of this item of work. No unsuitable or surplus material may be disposed of within the rights-of-way or project limits. The Contractor shall make all arrangements for disposal of the materials at off-site locations (including disposal outside of Tahoe basin) and at the Contractor’s expense.

All surplus materials generated from the project site during construction operations, including but not limited to, clearing and grubbing, topsoil salvage, sod salvage, channel and pond bed material, earthwork, and other operations, shall be off-hauled and salvaged/disposed of outside the project limits and Tahoe basin (unless a specific off-site area is authorized for use by the Engineer and applicable regulatory agencies). Any shortage of material caused by premature disposal of the surplus or salvaged materials, by the Contractor, shall be replaced by him/her and no additional compensation will be allowed for such replacement.

205.09 Measurement and Payment. “Earthwork” shall be measured on a **per bank cubic yard** basis, complete in place and accepted by the Engineer as conforming to all the requirements in the complete work. The contractor shall bid based on the cut, fill, and net quantities provided on the Project Plans. If the contractor disputes the quantities provided on the plans, the contractor shall pay for and provide a survey, at his/her own expense, and prepare the necessary figures and calculations to support the claim. Excess quantities will be paid for per cubic yard. Any associated contour grading and other general earthwork movement as required to complete the work shall be considered as included in the per cubic yard price.

The per **bank cubic yard** price paid for **“Earthwork”** shall include furnishing all labor, materials, tools, equipment, and incidentals and for doing all the earthwork involved, including but not limited to, excavation, loading, transport, onsite hauling, local borrow, import, screening, conditioning, backfill, rough grading, scarifying, compacting, finish grading, disposal of unsuitable or surplus materials, and otherwise manipulating the existing ground surface and soils, and placing additional local borrow or import soils as required for the grading and construction of the designated creek and floodplain areas, constructing and restoring temporary construction access roads for a complete job in place to the lines and grades as shown on the Project Plans, and specified in the Contract Documents, Project Permits, Standard Specifications, these Special Technical Provisions, and as directed by the Engineer, and no additional compensation will be allowed.

Full compensation for conforming to the provisions of this Section, not otherwise provided for, shall be considered as included in prices paid for the various contract items of work involved, and no additional compensation will be allowed.

SECTION 210 – RCB CULVERT STRUCTURE

210.01 General
Work covered under this specification consists of furnishing all of the labor, materials, tools, and equipment necessary for the design, furnishing, and construction of a reinforced concrete box (RCB)

culvert structure extension complete with headwalls, wing-walls, and interior culvert weirs in accordance with the Contract Documents, Standard Specifications, and these Special Technical Provisions, and in conformity with the lines, grades, dimensions, and general design parameters as shown on the Project Plans, and as established and directed by the Engineer. Where used in these Special Technical Provisions 'RCB culvert structure' shall mean to include all components necessary to provide for a complete and fully functional RCB culvert with headwalls, wing-walls and interior culvert weirs as shown on the Project Plans. In situations where two or more specifications or standards apply to this work, the most stringent requirements shall govern.

In addition to these Special Technical Provisions all work for the design, furnishing, and construction of the RCB culvert structure shall conform to the applicable portions of the State of Nevada Department of Transportation (NDOT) Standard Specifications and Plans for Road and Bridge Construction (current version). Attention is directed to the NDOT Standard Plans included as details in the Project Plans, and Sections 502 "Concrete Structures" and 502.03.24 "Precast Concrete Box Culverts" of the NDOT Standard Specifications. In addition, the RCB culvert structure shall conform to the following applicable criteria:

- ACI 304 and 318
- CRSI Manual of Standard Practice
- AASHTO M259
- ASTM C1433, C1577
- Current/applicable AASHTO and ASTM standard(s)
- Current Building Codes for Washoe County
- AASHTO HS20-44 / HL-93 LRFD traffic loading (whichever is more stringent)

Any trench shoring/protective systems as necessary for protection of existing utilities and/or to facilitate complete of the work for the RCB culvert structure is the sole responsibility of the Contractor, including engineering design, and shall be considered as included in the prices paid for construction of the RCB culvert structure.

All engineering design, submittals, furnishing and construction of a RCB culvert structure, transport, excavation, shoring, sub-base preparation, bedding materials, engineering fabrics, joint materials, seals, mortar, grout, structure backfill materials, pervious material, aggregate base, compaction, grading, disposal and other appurtenances as necessary for a complete structure in place including all work and equipment associated with the installation of the RCB culvert structure shall be included in the cost of this item, and no additional compensation shall be allowed for.

The submittals provided from the Contractor's precast manufacture at a minimum shall include the following:

- Concrete mix design and other material specifications
- Sizes and dimensions for each segment, headwall, and wing-wall
- Reinforcement (including size, splice type, and location)
- Joint details and connections including gaskets, seals, etc
- Cast-in components and appurtenances
- Anchors, lift devices, and accessories
- Lifting and transport requirements
- Installation/construction methods and assembly requirements

- Mortar and grout materials and other finishing requirements
- Manufacture specifications and applicable design standards (precast elements)
- Source Quality Control Testing/Inspection certifications (precast elements)
- Certificate of Compliance from manufacturer's QC for each shipment (precast elements)

210.02 Joints
All joints and connections for the RCB culvert structure shall be joined and sealed in a watertight fashion. At a minimum, an exterior joint wrap/seal conforming to ASTM C877 (such as ConSeal CS-212 or accepted equal) shall be used to ensure a watertight system.

210.03 Interior Culvert Weirs
All interior concrete culvert weirs shall be constructed as part of the RCB culvert structure to the locations and dimensions as shown on the Project Plans, and as directed by the Engineer. The construction approach, tools, and materials to be used for construction and installation/anchoring of the culvert weirs to the RCB culvert structure shall be submitted to the Engineer for review and acceptance prior to performance of the work. The Contractor shall clearly indicate the proposed method and materials to be used to securely anchor/attach the interior culvert weirs to the RCB culvert structure. In addition all interior culvert weirs shall be sealed to the interior RCB culvert walls and floor with a polyurethane construction sealant rated for use below the waterline (such as SikaFlex-1a, or accepted equal) or other equivalent method in accordance with the Contractor's structural design engineer and/or precast manufacturer's recommendations, as necessary to meet the anticipated hydrostatic forces.

210.04 Installation
All materials and construction methods shall conform to the applicable provisions of these Special Technical Provisions and NDOT Standard Plans and Specifications. Refer to Appendix B for Installation Instructions for the Culvert Extension. Any precast units shall not be shipped until concrete has attained a minimum flexural strength of 4000 psi and/or have cured at least five (5) days following fabrication.

The RCB culvert structure shall be laid to the lines and grade shown on the Plans. The Contractor shall clean the interior of the RCB culvert structure as work progresses, and the RCB culvert structure shall be clear and free of all debris and sediment before acceptance by the Engineer and the introduction of channel flow to the proposed channel and culvert.

The bottom of the trench shall be graded and prepared so as to provide a firm and uniform bearing for the RCB culvert structure along its entire length (or applicable segment for portion of the work) and prepared as indicated in the submitted and accepted installation specifications. Where the trench bottom is unsuitable (i.e. soft muck/refuse or bedrock/unyielding material unable to provide long-term support), the Contractor shall excavate to a depth required by the Engineer and replace with suitable material as specified or directed by the Engineer and geotechnical engineer. Sub-base and/or bedding materials shall be placed so as to provide a firm and uniform foundation and bedding for the RCB culvert structure along its entire length, well consolidated and compacted in conformance with the submitted and accepted installation specifications (bedding material shall be of no less quality and thickness as designated on the Plans). Structural backfill shall be as shown on the Plans and conform to Section 207 "Backfill" of these NDOT Standard Specifications.

All lift holes, etc shall be filled with expansive mortar or tapered precast mortar plugs to provide a permanent watertight section, and shall be finished flush on the inside face of the RCB culvert structure.

Seal with an exterior joint wrap material that is similar in characteristics and function as that which is stated above and used for any precast RCB culvert joints.

210.05 Repairs and Rejection
Cast-in place or precast elements may be repaired, if necessary, because of imperfections in manufacture/construction or handling damage and will be acceptable if, in the opinion of the Engineer, the repairs are sound, properly finished and cured, and the repaired section conforms to the requirements of this specification and any manufacturer's requirements.

Cast-in-place or precast elements shall be subject to rejection on account of failure to meet any of the specification requirements. Elements which show defects due to handling may be rejected at the site of installation regardless of prior acceptance. In addition any individual elements may be rejected, including but not limited to, any of the following:

- Fractures or cracks passing through the wall, except for a single end crack that does not exceed one half the thickness of the wall.
- Defects that indicates proportioning, mixing, and molding not in compliance with the specifications.
- Spalled, checked, honeycombed or open texture defects which are not purely surface in nature.
- Damaged ends, where such damage would prevent making a satisfactory joint.

Prior to acceptance of the RCB culvert structure any damage, defects, and/or associated repairs are subject to structural review by a licensed structural engineer (as selected by the Owner) and applicable precast manufacturer; and any associated costs shall be the responsibility of the Contractor, and no additional compensation shall be allowed for.

210.06 Marking for Precast Elements
Each section of the RCB culvert structure shall be clearly marked by waterproof paint of other means such that the date, manufacturer, plant location, material type, strength designation (design cover and loading) and nominal span and rise can be readily identified.

210.07 Measurement and Payment
"RCB Culvert Structure" shall be measured on a **lump sum** basis, complete in place and accepted by the Engineer as conforming to all the requirements in the complete work. The contract unit price paid for "RCB CULVERT STRUCTURE" shall include full compensation for furnishing all labor, materials, tools, equipment, and incidentals, and for performing all the work involved in constructing the RCB culvert structure, complete in place, including but not limited to excavation, shoring, sub-grade preparation, bedding, concrete, reinforcement steel, forms, curing, finishing, precast elements, mortar, grout, joint sealants, fabrics, structural backfill, compaction, transport, and disposal of excess materials and waste debris as shown on the Plans, as specified in these Special Technical Provisions and NDOT Standard Plans and Specifications, and as directed by the Engineer; and no additional compensation will be allowed.

SECTION 220 – FORD CROSSING

220.01 General
Work under this item shall consist of furnishing all labor, tools, equipment, and materials necessary to construct the proposed ford crossing to the limits shown and in accordance with the Project Plans,

Contract Documents, Standard Specifications, these Special Technical Provisions, Project Permit(s), and as directed by the Engineer.

The alignment, elevations, grades, slopes, dimensions, etc. of the proposed ford crossing is shown on the Project Plans to provide a basis for construction and bidding purposes. The Engineer is expected to make minor revisions and provide direction in the field to fit any varying field conditions. The Contractor shall include all costs for working under the direction of the Engineer in his/her bid for this work, as no additional compensation will be allow therefore. The Ford Crossing area must be dewatered prior to construction. Once coffer dams are in place and the water is diverted, the existing corrugated metal pipe shall be removed. Any road surface to be removed shall be stockpiled for later use on the surface. The ford crossing elements shall be placed with care to the grades shown on the plans. All exposed boulders shall be stable after placement. Voids shall be chinked as directed by the engineer and the area shall be jetted with water until voids are filled.

220.02 Measurement and Payment
"Ford Crossing" shall be measured on a **lump sum** basis, complete in place and accepted by the Engineer as conforming to all the requirements in the complete work. The contract unit price paid for **"Ford Crossing"** shall include full compensation for furnishing all labor, materials, tools, equipment, and incidentals, and for performing all the work involved in constructing the **"Ford Crossing"**, complete in place, including but not limited to removal and disposal of existing corrugated metal culvert, excavation, sub-grade preparation, rock placement, compaction, transport, and disposal of excess materials and waste debris as shown on the Plans, as specified in these Special Technical Provisions and the Standard Specifications, and as directed by the Engineer; and no additional compensation will be allowed.

SECTION 230 – PROPOSED CREEK CHANNEL

230.01 General
Work under this item shall consist of furnishing all labor, tools, equipment, and materials necessary to construct the proposed creek channel to the limits shown and in accordance with the Project Plans, Contract Documents, Standard Specifications, these Special Technical Provisions, Project Permit(s), and as directed by the Engineer.

The alignment, elevations, grades, slopes, dimensions, etc. of the proposed creek channel is shown on the Project Plans to provide a basis for construction and bidding purposes. The Engineer is expected to make minor revisions and provide direction in the field to fit any varying field conditions. The Contractor shall include all costs for working under the direction of the Engineer in his/her bid for this work, as no additional compensation will be allow therefore. Removal and disposal of all excess materials and waste debris shall be as specified elsewhere in these Special Technical Provisions.

230.02 Wetland Mat Channel
The designated area shall be cleared and grubbed, and excavated/filled to the lines and grades as shown on the Project Plans. The floodplain and proposed channel shall be graded to the lines and grades shown on the Project Plans less the expected height of the wetland mat. After the subgrade is completed, the Contractor shall request approval from the Engineer. Upon acceptance of the sub-grade by the Engineer the Contractor shall place the wetland mat as shown on the Plans taking care to follow overlap and staking guidelines. Once the wetland mat is secure, the contractor shall place channel bed material to the lines, grades, and dimensions as shown on the Project Plans without disturbing the wetland mat, and as directed by the Engineer (in accordance with Section 200, "Gravel, Cobble, Rock, Boulder & Other

Aggregates," of these Special Technical Provisions). The bed materials shall be filled and compacted using a shovel or mcleod around all edges of sod and any structures to leave minimal voids. The Contractor shall hose down the channel to fill any voids with additional bed material as needed.

230.03 Sod Block Channel

The designated area shall be cleared and grubbed, and excavated/filled to the lines and grades as shown on the Project Plans. The floodplain and channel shall be graded to the lines and grades shown on the Project Plans less the expected height of the salvaged sod. After the subgrade is completed, the Contractor shall request approval from the Engineer. Upon acceptance of the sub-grade by the Engineer the Contractor shall place the sod blocks as shown on the Plans followed by the channel bed material section to the lines, grades, and dimensions as shown on the Project Plans, and as directed by the Engineer (in accordance with Section 200, "Gravel, Cobble, Rock, Boulder & Other Aggregates," of these Special Technical Provisions). Stakes shall then be installed. The bed materials shall be filled and compacted using a shovel or mcleod around all edges of sod and any structures to leave minimal voids. The Contractor shall hose down the channel to fill any voids with additional bed material as needed.

230.04 Boulder Step Pools

The designated area shall be cleared and grubbed, and excavated/fill to the lines and grades as shown on the Project Plans. The sub-grade shall be prepared and compacted as shown on the Plans, and channel bed material and well graded gravel mixture for chinking shall be placed to the lines, grades, and dimensions as shown on the Project Plans, and as directed by the Engineer (in accordance with Section 200, "Cobble, Rock, Boulder & Other Aggregates", of these Special Technical Provisions). Following the placement of the channel bed cobble and well graded gravel mixture materials, the Contractor shall properly place the boulders as shown on the Project Plans and as directed by the Engineer. Following the placement of boulders and necessary chinking material, the Contractor shall then properly place and compact all designated fill (as specified on the plans) to create the banks of the proposed creek channel and floodplain areas in order to produce a firm and stable creek channel and floodplain to the lines, grades, and dimensions as shown on the Project Plans and as directed by the Engineer. All fill including topsoil shall be placed to the required thickness, and finish graded to blend with the adjacent floodplain areas to create a smooth, natural appearance as directed by the Engineer; and to create a stable area to receive all proposed revegetation treatments as specified elsewhere in these Special Technical Provisions. If directed by the Engineer, the Contractor shall place additional "Chinking Material" and/or Channel Bed Material to fill additional voids in both the channel bed and structure. Any willow stakes shall be incorporated with the work as necessary in order to meet the revegetation treatment requirements (see Section 260, "Revegetation").

230.05 Measurement and Payment

"Wetland Mat Channel" shall be measured on a **per linear foot** basis along the centerline of the facility (i.e. alignments as shown on the Project Plans), complete in place and accepted by the Engineer as conforming to all the requirements in the complete work. The linear foot price for **"Wetland Mat Channel"** shall include furnishing all labor, materials, tools, equipment, and incidentals and for doing all the work involved in constructing the channel section, including but not limited to, excavation, sub-grade preparation, grading, stone materials, backfill, local borrow, import, compaction, and off-haul and disposal of excess materials, for a complete job in place to the lines, grades, and dimensions as shown on the Project Plans, and specified in the Contract Documents, Project Permits, Standard Specifications, these Special Technical Provisions, and as directed by the Engineer, and no additional compensation will be allowed.

"Sod Block Channel" shall be measured on a **per linear foot** basis along the centerline of the facility (i.e. alignments as shown on the Project Plans), complete in place and accepted by the Engineer as conforming to all the requirements in the complete work. The linear foot price for **"Wetland Mat Channel"** shall include furnishing all labor, materials, tools, equipment, and incidentals and for doing all the work involved in constructing the channel section, including but not limited to, excavation, sub-grade preparation, grading, stone materials, backfill, local borrow, import, compaction, and off-haul and disposal of excess materials, for a complete job in place to the lines, grades, and dimensions as shown on the Project Plans, and specified in the Contract Documents, Project Permits, Standard Specifications, these Special Technical Provisions, and as directed by the Engineer, and no additional compensation will be allowed.

"Boulder Step Pools – South Fork Marlette" shall be measured on a **lump sum** basis, complete in place and accepted by the Engineer as conforming to all the requirements in the complete work. The lump sum price for **"Boulder Step Pools – South Fork Marlette"** shall include furnishing all labor, materials, tools, equipment, and incidentals and for doing all the work involved in constructing the boulder step pool channel section, including but not limited to, excavation, sub-grade preparation, grading, stone materials, backfill, local borrow, import, compaction, and off-haul and disposal of excess materials, for a complete job in place to the lines, grades, and dimensions as shown on the Project Plans, and specified in the Contract Documents, Project Permits, Standard Specifications, these Special Technical Provisions, and as directed by the Engineer, and no additional compensation will be allowed.

"Boulder Step Pools – Main Fork Marlette" shall be measured on a **lump sum** basis, complete in place and accepted by the Engineer as conforming to all the requirements in the complete work. The lump sum price for **"Boulder Step Pools – Main Fork Marlette"** shall include furnishing all labor, materials, tools, equipment, and incidentals and for doing all the work involved in constructing the boulder step pool channel section, including but not limited to, excavation, sub-grade preparation, grading, stone materials, backfill, local borrow, import, compaction, and off-haul and disposal of excess materials, for a complete job in place to the lines, grades, and dimensions as shown on the Project Plans, and specified in the Contract Documents, Project Permits, Standard Specifications, these Special Technical Provisions, and as directed by the Engineer, and no additional compensation will be allowed.

SECTION 235 – LOGS AND TIMBER

235.01 General

All logs shall be sized as indicated in the Plans. All logs are to be harvested from the trees marked for removal on site by the Contractor and cost of salvaging and storing these logs shall be included in other bid items. If logs are damaged by the contractor during removal, it is the sole responsibility of the Contractor to find a suitable replacement and import the logs into the site. Only logs from coniferous trees native to the Tahoe basin will be acceptable. All logs to be incorporated into the project must be tight grain sound wood with no rot. The Engineer has the right to refuse unsatisfactory logs prior to placement in the project.

235.02 Measurement and Payment.

"As-Directed Log Placement for Enhanced Floodplain Roughness" shall be measured on a **per liner foot** basis along the length of the log, complete in place and accepted by the Engineer as conforming to all the requirements in the complete work. The contract price paid for **"As-Directed Log Placement for Enhanced Floodplain Roughness"** shall include full compensation for furnishing all labor, materials,

tools, equipment, and incidentals, and for performing all the work involved in placing the cut logs above finished grade as directed by the Engineer, complete in place, as shown on the Plans, as specified in these Special Technical Provisions and as directed by the Engineer; and no additional compensation will be allowed.

Full compensation for furnishing all labor, materials, tools, equipment, and incidentals for the materials in this section, complete in place as shown on the Plans, as specified in the Standard Specifications, these Special Technical Provisions, and as directed by the Engineer, should be incidental to the other construction items; no additional compensation will be allowed.

SECTION 240 – ROAD DECOMMISSION

240.01 General
Existing disturbed roads and constructed dirt road grades shall be decommissioned after use for construction access. Earthwork required for decommissioning constructed dirt access roads is included in the "Earthwork" bid item. Revegetation of the decommissioned road is included in the revegetation bid item for the appropriate treatment type. This item encompasses the surface treatment for the decommissioned dirt roads. Decommissioning the dirt roads will involve ripping the soil to 6 inches depth and then adding revegetation seed mix as directed by engineer. After seed mix is applied, mulch must also be applied per the Section 260 of these specifications. Finally, cut trees and branches should be scatted to create a rough surface that is not easily traversable by foot or vehicle. Work required for restoration of existing dirt roads that are to remain and are disturbed during construction is included in Mobilization and Demobilization.

240.02 Measurement and Payment.

"Road Grade Decommission" shall be measured on a **per square foot** basis, complete in place and accepted by the Engineer as conforming to all the requirements in the complete work. The contract price paid for **"Road Grade Decommission"** shall include full compensation for furnishing all labor, materials, tools, equipment, and incidentals, and for performing all the work involved in relocating the decommissioning the dirt road, complete in place, as shown on the Plans, as specified in these Special Technical Provisions and as directed by the Engineer; and no additional compensation will be allowed.

SECTION 260 – REVEGETATION

260.01 General. The Contractor shall perform all revegetation work as specified herein and in accordance with the provisions of these Special Technical Provisions, the Project Plans, and the Standard Specifications. The revegetation work shall consist of all site preparations associated with the revegetation treatments and shall include seeding, mulching, installation of erosion control blankets, installation of willow stakes and installation of wetland sod mats. The revegetation work may include sod and plant salvage. Maintenance and record keeping are required in accordance with the Project Plans, and as directed by the Engineer. Areas to receive revegetation treatments shall include all areas disturbed during construction and all areas indicated on the plans and as directed by the Engineer.

Revegetation work shall be conducted during non-windy conditions. Windy conditions are defined as a sustained wind of 10 mph or more; gusts where the difference between the ambient and the increased velocity is more than 4 mph; or any conditions that may make the dispersal of revegetation and erosion

control material difficult or inaccurate. The Contractor is responsible for providing certified instruments or data from certified instruments in case of a claim or conflict. There shall be no pay item, payment or claim for instruments or data from measuring instruments.

All revegetated areas shall be maintained for one year following completion of work to ensure proper establishment of vegetation. Supplemental treatments may be required if revegetation efforts are unsatisfactory following completion of work as determined by the Engineer. This re-treatment may include re-application of the seed mix, willow stakes, containerized plants, mulch, weed abatement, and other items as necessary to achieve the performance measures below. The cost of this bonding shall be included in the Revegetation bid item. The Contractor must achieve 70% vegetative cover of native species and <2% cover of non-native species for areas receiving seed mix application.

The Contractor shall notify the Engineer no less than five (5) working days in advance of revegetation work and shall not begin work until prepared revegetation treatment areas have been accepted by the Engineer. The Contractor shall request that treatment types and boundaries are located by the Engineer prior to progressing with the work.

No substitutions or alterations to these Special Technical Provisions shall be accepted without the prior written approval of the Engineer. No further disturbance of any treatment area shall be allowed once seeding or installation of cuttings and plant materials has been initiated.

260.02 Soil Disturbance
Soil disturbance shall be minimized and limited to those areas that require treatment. All existing vegetation within the project limits not designated for removal shall be protected. Delineate project boundaries with fencing per the requirements in Construction Limit Fencing and in these Special Technical Provisions. Traffic outside of the project area is prohibited. Any existing or previously installed vegetation damaged shall be replaced by the Contractor. Areas to receive revegetation treatments shall include all areas disturbed during construction, as indicated on the Project Plans and as directed by the Engineer.

260.03 Submittals. Within ten (10) calendar days following the Notice to Proceed for the contract, the Contractor shall submit to the Engineer statements proving that orders for erosion control blanket and stakes have been received and accepted by the supplier(s). The statement(s) shall include product specifications and quantity of product(s) to be delivered and the estimated date(s) of delivery. Additionally, the Contractor shall submit plans, labels or material samples for the following items:

- Revegetation Schedule and Order of Work

Proposed substitutions must be submitted in writing for approval by the Engineer.

260.04 Materials
Seed
All Seed Mix shall be supplied by the NTCD to the Contractor 3 days prior to seeding. NTCD will supply the Contractor with enough seed for applying to disturbed areas plus an additional 20%. Contractor will supply at their expense any additional seed necessary to adequately seed the revegetation areas. Seed mix will include shallow-rooted annual and perennial grasses and forbs native to the Lake Tahoe Basin and sourced from the Sierra Nevada as listed on the Project Plans.

Wetland Sod Mats

Wetland sod mats will be provided by NTCD to the Contractor. The Contractor will notify NTCD five (5) working days prior to requiring the wetland sod mat to allow for coordination with the vegetation contractor supplying the wetland sod mats. Wetland sod mats will be either rolled or on pallets and be delivered to the staging area for installation. Wetland sod mats will include sedges (*Carex spp*.), rushes (*Juncus spp*.) and other wetland species grown and knit into a coir blanket. Exact sizing of mats will be determined by the vegetation contractor in accordance with best installation practices. Vegetation contractor will deliver the mats to the staging area and meet with the Contractor to advise on installation.

Containerized Wetland Plugs

If used, all containerized plugs shall be supplied by NTCD to the Contractor 3 days prior to planting. All material not deemed acceptable by the Contractor and/or the Engineer shall be replaced by NTCD. Upon acceptance of material by the Contractor, the Contractor shall assume responsibility for plant health and survival. Plants shall be supplied on site by NTCD at no additional cost to the Contractor.

Salvaged Sod and Wetland Plugs

A small amount of sod could be harvested from the project site near the upstream portion of Marlette Creek's main fork. NTCD will mark sod to be salvaged prior to construction in this area and relay this information to the Contractor. If, during construction, there is determined to be an area with sufficient plant material to salvage, but not sufficient to use as sod blocks without modification by the vegetation contractor, the Contractor will postpone construction in this area for 24 hours to arrange for the vegetation contractor to be on site for the collection of this material during excavation. Salvaged plant material that cannot produce cohesive sod blocks will be transported off-site to the vegetation contractor's property for production of plugs or introduction into the wetland sod mats grown for the project area. Material that cannot be salvaged will be stockpiled, and re-applied as organic matter as directed by the Engineer.

Any potential sod harvested from the footprint of the restoration area will not be stockpiled for more than 30 calendar days. Low-weight bearing equipment (ASV-POSI TRACK SKID STEER with a front-end bucket (front-end loader or tractor with bucket) will be used to salvage and transport sod and minimize damage to native vegetation remaining in place along temporary maintenance access road. Sod is to be removed in as large a unit as practicable, resulting in clean, vertical edges. Sod shall be scalped from the original ground surface to a depth of no less than eight (8) inches, as measured from the root crown. Stored sod shall be placed with roots down and edges snugly adjoining adjacent sections in a shaded facility for a maximum time of one month; minimize storage and handling. Sod shall be watered twice a day at a minimum and not be allowed to dry out during handling and storage. Sod shall be re-planted concurrent with channel and floodplain construction to the greatest extent possible and as directed by the Engineer.

Willow Stakes

All materials shall be cut from healthy, live branches of willow and shall be taken from suitable plants within the project area as identified by the Engineer. Exclusively cutting poles from one plant will not be allowed. Stakes may vary in length, depending on source material and application, but shall be a minimum of two (2) feet in length and a minimum of one (1) inch diameter and a maximum of two (2) inch diameter. Material shall not be cut more than seven days prior to installation. Stakes shall be straight, with all leaves removed from the stems. All cuts shall be clean without frayed ends. Cut

bottoms will be at a forty-five-degree angle. The materials' cut bottoms will be kept in a water-filled bucket in a shaded environment or submerged in a shaded stream pool.

Salvaged Willow Root Wads
Throughout the project area, native willows clumps shall be salvaged from the restoration area. Willows will be pruned prior to removal so that branches include two to three nodes, but do not exceed six (6) inches in length. Cuts shall be clean, leave no frayed bark, and be made ½ inch above the node.

Plants will be carefully removed by excavating around the root zone with a backhoe bucket, or other approved equipment. As much of the root ball as feasible shall be removed intact and damaged roots shall be pruned. Burlap may be used to wrap and protect the root zone during transport. Root wads shall be stored in pre-excavated, pre-watered trenches and maintained well-watered and healthy until moved to the permanent planting sites. Engineer will indicate planting locations that will coincide with enhanced floodplain roughness and other areas.

Mulch
Mulch shall be wood chips generated on site or pine needles. Mulch shall contain no more than 5% impurities by volume such as pinecones, twigs, rocks or other material. Garbage shall represent no more than 0.5% of the total volume. Mulch shall contain no more than 2% by volume mineral soil and no more than 10% by volume decomposed organic matter.

Erosion Control Blanket, Wattles, and Stakes
Where indicated on the plans, on floodplains and upland slopes greater than or equal to 3H:1V, a single layer of erosion control blankets that are composed of certified weed-free coir or excelsior, with an all-natural fibers netting (no plastic, straw, or jute) will be installed such as North American Green SC150BN, or equivalent as approved by the Engineer. Any 3H:1V slopes greater than 20 feet in length shall also have wattles/fiber logs installed. Wattles will be composed of certified weed-free coir or excelsior with all-natural netting. No plastic or straw-based materials are allowable in blankets or wattles. Each roll or bail of blanket and wattles shall be identified with a tag or label securely affixed to the outside of the roll on one end. The label shall include the manufacturer or supplier, the style number, and the roll and lot numbers.
Stakes shall be 12 inches in length, manufactured from a wood (North American Green Eco-STAKE or equivalent), or as approved by the Engineer. No plastic is allowable.

260.05 Installation of Treatments
The Contractor shall notify the Engineer no less than three working days in advance of revegetation work and shall not begin the work until prepared treatment areas have been approved. The Engineer shall verify labeling of erosion control blankets and stakes upon delivery to the site and prior to application.

Re-planting Salvaged Sod
If sod was salvaged from the project area, the Engineer shall approve the planting dates and final locations. Thoroughly water all sod blocks before re-planting. Sod shall be transported from its storage location to planting location within 10 minutes. Re-plant salvaged wetland sod adjacent to the stream channel working away in the floodplain in areas identified by the Engineer. Immediately water sod after completion of re-planting.

Installing Wetland Sod Mats

Wetland sod mats shall be placed at the stream's edge over leveled ground. Installation shall ensure that mats are in direct contact with the soil so that no space between the bottom of the mat and the ground could prevent good root-to-soil contact. Wetland sod mats shall be staked in each corner and every one foot (1) feet along the mat's bottom and upstream edges. Staking along the uphill and downstream edges shall be no more three feet apart. Stakes shall be 12 inches to 16 inches, manufactured from a wood (North American Green Eco-STAKE or equivalent), or as approved by the Engineer. No plastic is allowable. Hay hooks may be used to help place and adjust the mats into the correct position.

Preparing Seed Beds

All bare soils in the project area, and those in areas outside the project area that were disturbed by the Contractor, shall be loosened as needed to a depth of 6 inches unless otherwise specified on the Project Plans or directed by the Engineer. Soils shall be loosened with hand tools, an agricultural disc, rippers, or other equipment approved by the Engineer. Soils shall be loosened so that no soil clods are larger than an average of 1 inch in diameter. Care will be taken around existing trees and shrubs to prevent root damage during soil conditioning, grading and excavation activities. No mechanical loosening of soil shall take place within the dripline of mature trees or shrubs. Final surfaces shall be left rough unless erosion control blankets are specified, in which case soils shall be raked smooth. No wheeled or other mechanical equipment shall be permitted to travel on the prepared seedbed. Seed bed shall be prepared when soils are dry.

Seeding

Seed shall be uniformly broadcast with hand-held seeders to achieve desired application rate. The areas will be divided into ½ to ¼ acre areas before seeding to ensure appropriate application rate. Seed shall be incorporated by raking or harrowing to a depth of ¼ inch to ½ inch. Seed shall not be left uncovered more than 24 hours. Seeding shall not occur under conditions that would allow the seed to become windborne (winds greater than 5 mph) or to wash away.

Mulching

Material shall be evenly applied to a depth of approximately 1 inch, for 100% cover over revegetation areas (except for areas to receive the erosion control blanket—which shall not receive mulch). Average mulch depth shall be approximately 0.5 inches with a max depth of less than 2 inches over no greater than 1 square foot.

Installing Erosion Control Blankets and Wattles

Erosion control blanket shall be installed where shown on the Project Plans. Erosion control blanket shall be installed in accordance with the Project Plans. Stakes shall be securely anchored at an approximate minimum rate of three (3) feet on center. Blanket shall be keyed into a six (6) by six (6) inch deep trench at the top of slopes and be anchored into the bottom of the trenches with stakes on one-foot centers. Trenches shall be backfilled with compacted soil, and blanket shall be folded over the trench and secured with stakes on one-foot centers. Blankets shall be overlapped by a twelve (12) inches minimum and staked together.

Wattles shall be placed along a level contour at 20-foot spacing. The wattles shall be keyed into the ground 4 inches and staked every 2 feet on both sides of the log. There shall be a minimum overlap of 12 inches between each wattle.

Planting Containerized Wetland Plugs

The Engineer shall approve the planting dates and final locations. Plants shall be stored in a shady location and preferably in shallow water until 1 hour before planting. The Contractor shall schedule the

planting three working days in advance of the proposed planting time with the Engineer. Plants shall be thoroughly watered before planting.

Plugs shall be planted using this method: Cut an 'X' through the erosion control blanket the width of the required hole (diameter of pot minimum). Remove and mulch to expose soil. If soil is not moist, thoroughly water holes prior to planting and plant immediately. Dig hole 2 times the diameter and 1.5 times the length of the plug. Loosen soils in the bottom and along the sides of the hole. Place the plant in the hole and backfill with the excavated moist soil so that the crown is at grade. Tamp soil firmly into place. Replace any displaced mulch and/or blanket. Immediately water plants after completion of planting.

Installing Willow Stakes
Willow stakes shall be installed per the project plans. Stakes shall be pushed into a hole slightly larger than the diameter of the pole, prepared using a 4' bucket stinger, power auger, Waterjet Stinger, round steel concrete form stakes or other approved methodology. The bottom of the willow stake shall be at an elevation below the bankfull water elevation of the adjacent creek. Insert the stake in the excavated hole to the proper depth, backfill the hole with the excavated material and firmly tamp the soil around the poles to eliminate air pockets and hold the poles in place.

Installing Salvaged Willow Root Wads
Native willows clumps will be salvaged from the restoration area as shown on the plans and as staked in the field as directed by the Engineer. Willows shall be removed and replanted with construction as much as practicable. Engineer will indicate planting locations.

260.06 Revegetation Treatment Types
Channel Treatment
Complete stream channel and floodplain subgrade. According to Project Plans, install wetland sod mats to construct a sod blanket channel. Starting at channel banks or edge of disturbance area and working downstream to achieve full coverage of the restored channel bank and 1 foot of the floodplain width. Water mat immediately after planting using creek water. Willow stakes shall be installed according to Project Plans. Engineer will mark locations of wetland sod mats, and willow staking. Up to 8,000 square feet of wetland sod mat, 2,500 square feet of erosion control blanket, and 500 containerized wetland plugs will be installed in this treatment area.

Floodplain Treatment
Prior to floodplain revegetation treatment, the Contractor shall verify with Engineer that there are no areas of excessive compaction. Loosen any compacted soil identified as necessary to 6" depth and rake smooth. Broadcast Riparian seed mix per seed mix and Engineer instructions. Rake if necessary to achieve even broadcast. Install a single layer of erosion control blanket over seed within 24 hours on all areas as shown on plans. Areas within 10 feet of the water's edge may also be planted with containerized wetland plugs into the erosion control blanket if less than 8,000 square feet of wetland sod mat is installed. Areas not covered with erosion control blanket will be seeded with Riparian Seed Mix and then covered with 1 inch layer of mulch. A maximum of 19,000 square feet of erosion control blanket will be installed in the floodplain area.

Upland Treatment
Prior to upland revegetation treatment, the Contractor shall verify with Engineer approval that there are no areas of excessive compaction. De-compact as necessary to 6" depth and rake smooth. Seed with

Upland Seed Mix. Install a single layer of straw coconut erosion control blanket on slopes 3V:1H or greater. No more than 12,500 square feet of erosion control blanket will be installed on 3:1 slopes. Wattles will be placed on any 3V:1H slope that is greater than 20 feet in length. Mulch remaining areas with 1 inch layer of mulch.

Willow Transplant
Salvaged willows shall be relocated and transplanted according to the Project Plans and as directed by the Engineer.

260.08 Performance Standard and Acceptance
The Contractor shall guarantee revegetation in accordance with these Special Technical Provisions. Revegetated areas will be inspected by the Engineer at completion of installation and accepted subject to compliance with specified materials and installation requirements.

Following one full growing season after treatment, the Contractor must achieve 70% native vegetative cover for areas receiving seed mix application and 90% mulch coverage. Non-native plant cover should be less than 2%. Cover assessment shall be assessed by the point-intercept method. If specified coverage is not achieved, the Contractor may be required to re-seed, and/or re-mulch, and manually remove weeds. The Contractor will provide the Engineer notification at least ten working days before the requested inspection date.

A revegetation security of 25 percent of the total cost of all revegetation work shall remain in effect until maintenance and survival guarantee criteria have been met as defined herein and accepted in writing by the Engineer. The acceptance for releasing the security will occur following the end of the first growing season if the success criteria is met. This guarantee period constitutes the warranty period strictly associated with the revegetation work described herein.

Acceptance of other work and/or filing of a Notice of Completion shall not constitute acceptance, waiver and/or modification of the revegetation, revegetation maintenance, and survival guarantee portion of the project.

260.10 Measurement and payment

"Revegetation - Channel Treatment" shall be measured on a **square foot** basis, complete in place and accepted by the Engineer as conforming to all the requirements in the complete work. The contract unit price paid for **"Revegetation - Channel Treatment**" shall include full compensation for furnishing all labor, materials, tools, equipment, and incidentals, and for performing all the work involved in completing the revegetation of this area including the required maintenance and security, complete in place, as shown on the Plans, as specified in these Special Technical Provisions and as directed by the Engineer; and no additional compensation will be allowed.

"Revegetation - Floodplain Treatment" shall be measured on a **square foot** basis, complete in place and accepted by the Engineer as conforming to all the requirements in the complete work. Additional unauthorized disturbance outside those areas shown on the Project Plans shall be at the expense of the Contractor and not part of the square footage measured for payment. The contract price paid for **"Revegetation - Floodplain Treatment"** shall include full compensation for furnishing all labor, materials, tools, equipment, and incidentals, and for performing all the work involved in completing the revegetation of this area including the required erosion control blanket, soil preparation, seed

installation, maintenance and bonding, complete in place, as shown on the Plans, as specified in these Special Technical Provisions and as directed by the Engineer; and no additional compensation will be allowed.

"Revegetation - Upland Treatment" shall be measured on a **square foot** basis, complete in place and accepted by the Engineer as conforming to all the requirements in the complete work. Additional unauthorized disturbance outside those areas shown on the Project Plans shall be at the expense of the Contractor and not part of the square footage measured for payment. The contract price paid for **"Revegetation - Upland Treatment"** shall include full compensation for furnishing all labor, materials, tools, equipment, and incidentals, and for performing all the work involved in completing the revegetation of this area including the required erosion control blanket, soil preparation, seed installation, maintenance and bonding, complete in place, as shown on the Plans, as specified in these Special Technical Provisions and as directed by the Engineer; and no additional compensation will be allowed.

"Willow Transplant" shall be measured on a **per each** basis, complete in place and accepted by the Engineer as conforming to all the requirements in the complete work. The contract price paid for **"Willow Transplant"** shall include full compensation for furnishing all labor, materials, tools, equipment, and incidentals, and for performing all the work involved in salvaging and installing the root wad as directed by the Engineer, complete in place, as shown on the Plans, as specified in these Special Technical Provisions and as directed by the Engineer; and no additional compensation will be allowed.

Appendix A: Preliminary Dewatering and Diversion Plan

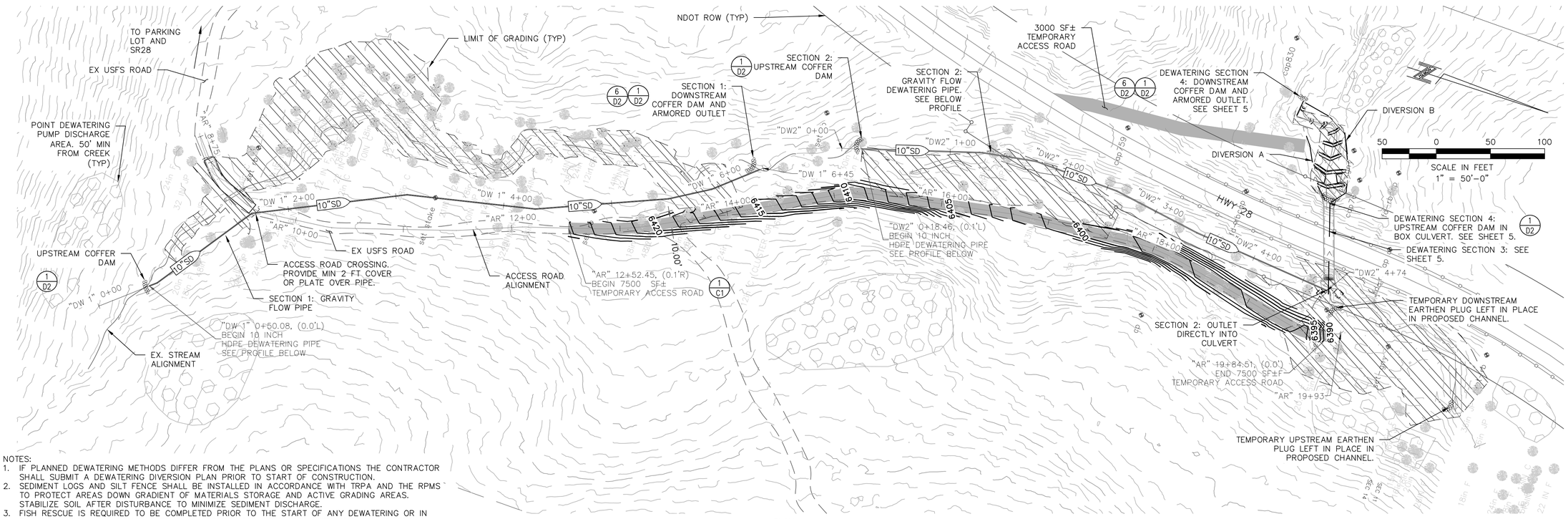

PLAN

NOTES:
1. IF PLANNED DEWATERING METHODS DIFFER FROM THE PLANS OR SPECIFICATIONS THE CONTRACTOR SHALL SUBMIT A DEWATERING DIVERSION PLAN PRIOR TO START OF CONSTRUCTION.
2. SEDIMENT LOGS AND SILT FENCE SHALL BE INSTALLED IN ACCORDANCE WITH TRPA AND THE RPMS TO PROTECT AREAS DOWN GRADIENT OF MATERIALS STORAGE AND ACTIVE GRADING AREAS. STABILIZE SOIL AFTER DISTURBANCE TO MINIMIZE SEDIMENT DISCHARGE.
3. FISH RESCUE IS REQUIRED TO BE COMPLETED PRIOR TO THE START OF ANY DEWATERING OR IN CHANNEL WORK. THE CONTRACTOR SHALL COORDINATE WORK WITH NTCD AND FISH RESCUE SUBCONSULTANT NTCD EMPLOYS.

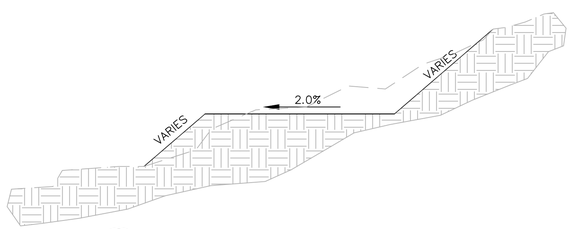

1 / C1 ACCESS ROAD TYPICAL SECTION
1"=1.5'

NOTES:
1. ROAD SECTION IS A SUGGESTED TYPICAL DETAIL, CONTRACTOR CAN DETERMINE AT THEIR DISCRETION NECESSARY ACCESS ROAD IMPROVEMENTS AND EXTENTS. ACCESS ROAD IMPROVEMENT LIMITS SHOWN ARE AN ESTIMATE BASED ON THE TYPICAL SECTION ABOVE AND ACCESS ROAD PROFILE.
2. CONTRACTOR SHALL RESTORE ALL EXISTING DISTURBED DIRT ROADS AND CONSTRUCTED TEMPORARY ACCESS ROADS TO THE ORIGINAL GRADES AND CONDITION PRIOR TO FINAL COMPLETION.

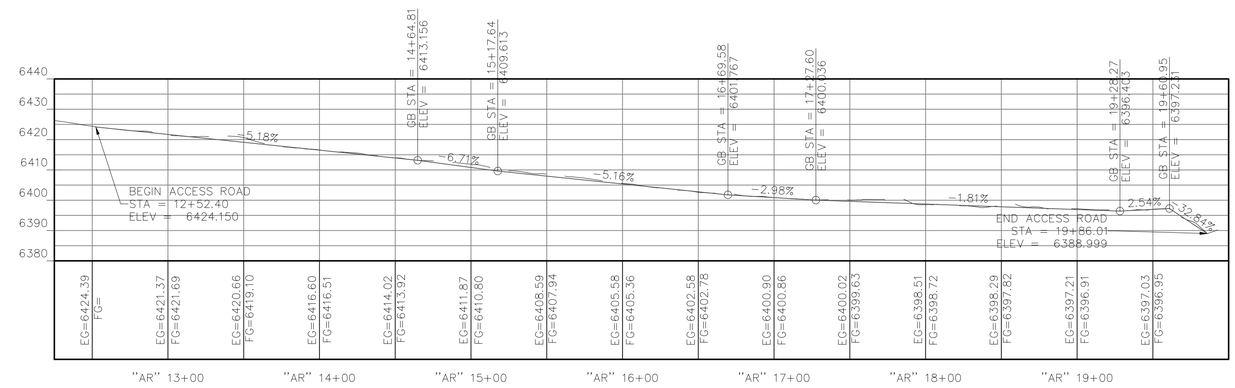

"AR" PROFILE–ACCESS ROAD

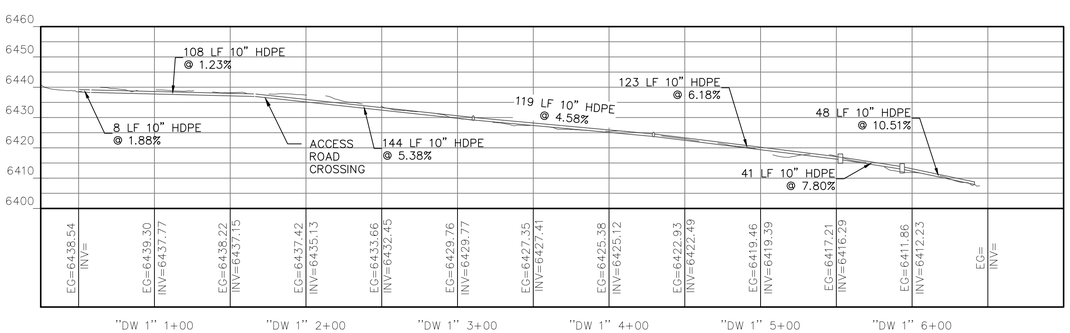

"DW1" PROFILE–SECTION 1 DEWATERING

SCALE:
HORIZONTAL: 1"=50'
VERTICAL: 1" = 25'

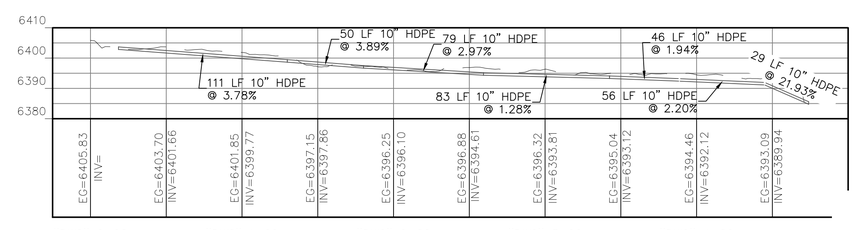

"DW2" PROFILE–SECTION 2 DEWATERING

Nevada Tahoe Conservation District

DEWATERING AND ACCESS 1
MARLETTE CREEK RESTORATION PROJECT

PROFESSIONAL ENGINEER–STATE OF NEVADA
MEGHAN COLLETT KELLY
Exp: 6/30/25
CIVIL
4/8/2025
No. 20851

BID SET

DESIGNED/DRAWN	EK
CHECKED	MK
DATE	4/2025
SCALE	AS SHOWN
PROJECT	MARLETTE CREEK RESTORATION
SHEET	C1

811 Know what's below. Call before you dig.

File Path: c:\Users\ekerl.desktop-gnu4d7n\nevada tahoe conservation district\nevada tahoe conservation district - documents\Projects\Marlette\CAD\Sheets\Cx - Access and Dewatering.dwg 4/8/2025 2:27 PM

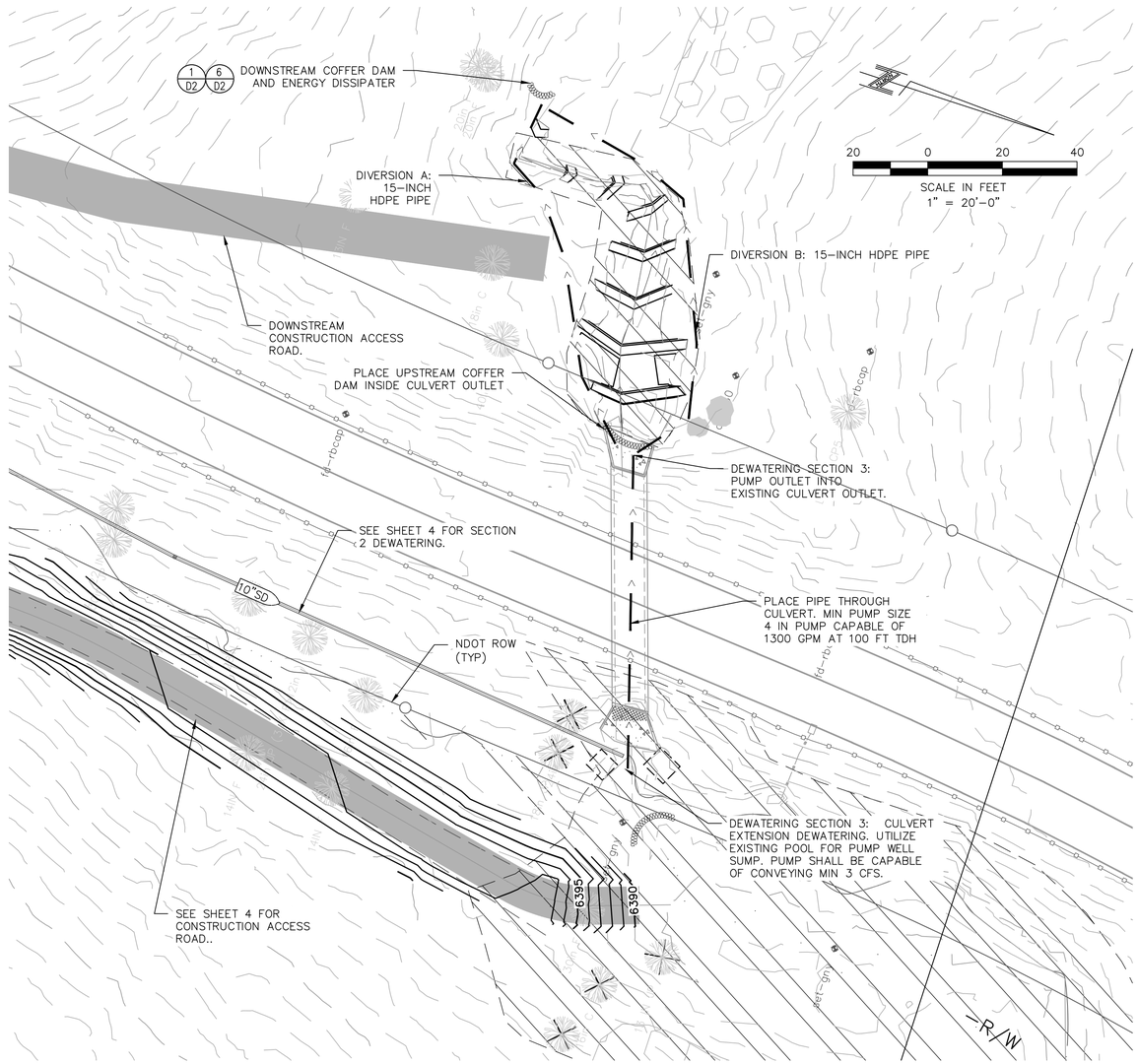

PLAN

NOTES: .

1. DEWATERING DURING THE DOWNSTREAM CHANNEL IMPROVEMENTS MAY REQUIRE RELOCATING DEWATERING PIPES TO THE OPPOSITE SIDE OF THE CHANNEL (DEWATERING A AND B) TO GAIN UNOBSTRUCTED ACCESS TO EACH SIDE. CONTRACTOR SHALL FINALIZE IMPROVEMENTS ON ONE SIDE PRIOR TO RELOCATING DEWATERING PIPES.
2. THE CONTRACTOR MAY PROPOSE ALTERNATIVE DEWATERING METHODS, ALL DEWATERING METHODS SHALL BE APPROVED BY THE ENGINEER PRIOR TO START OF CONSTRUCTION.
3. SEDIMENT LOGS AND SILT FENCE SHALL BE INSTALLED IN ACCORDANCE WITH TRPA AND THE RPMS TO PROTECT AREAS DOWN GRADIENT OF MATERIALS STORAGE AND ACTIVE GRADING AREAS. STABILIZE SOIL AFTER DISTURBANCE TO MINIMIZE SEDIMENT DISCHARGE.
4. FISH RESCUE IS REQUIRED TO BE COMPLETED PRIOR TO THE START OF ANY DEWATERING OR IN CHANNEL WORK. THE CONTRACTOR SHALL COORDINATE WORK WITH NTCD AND FISH RESCUE SUBCONSULTANT NTCD EMPLOYS.

Know what's below. Call before you dig.

BID SET

Nevada Tahoe Conservation District

DEWATERING AND ACCESS 2

MARLETTE CREEK RESTORATION PROJECT

PROFESSIONAL ENGINEER – STATE OF NEVADA
MEGHAN CAITLIN KELLY
Exp: 6/30/25
CIVIL
4/8/2025
No. 20851

DESIGNED/DRAWN	EK
CHECKED	MK
DATE	4/2025
SCALE	AS SHOWN
PROJECT	MARLETTE CREEK RESTORATION
SHEET	C2

File Path: c:\Users\ekerl.desktop-gnu4d7n\nevada tahoe conservation district\nevada tahoe conservation district – documents\Projects\Marlette\CAD\Sheets\Cx – Access and Dewatering.dwg 4/8/2025 2:27 PM

Appendix B: Jensen Culvert Extension Installation Instructions

BOX CULVERT

Segmental Type 1

Recommended Installation Requirements

Corporate Engineering Office
9895 Double R Blvd
Reno, Nevada 89521
Phone 775-352-2700

MANUFACTURER OF PRECAST CONCRETE PRODUCTS

Copyright Information © 2024 Jensen Precast All Rights Reserved. All materials appearing as Jensen Precast documents and the like are propriety work product and are protected under U.S. copyright and other laws. Unless in conjunction with business conducted with Jensen Precast, any use of Jensen Precast work product without express, written consent is prohibited and recipient is prohibited from distributing any and all work product to non-approved third parties under penalty of civil action.

Type 1 Segmental Box Culvert Installation Recommendations

Jensen Precast has provided this document to guide specifiers, municipalities and our customers involved in the specifying, purchasing and installing of underground precast box culvert. These instructions are a guide and shall not supersede those of the project specifications. The Installer shall be solely responsible for, and have control over, construction means, methods, techniques, sequence and procedures, and for coordinating all portions of the work under his contract. Other Jensen Precast company policies, including shipping, terms and conditions, ordering instructions, and others also apply. Contact Jensen Precast for complete information.

The Installer (installation contractor) shall be solely responsible for compliance with all Federal, State, and local laws and regulations including, but not limited to, job site safety, health and environmental requirements.

Delivery

It is important to be prepared for the delivery of every box. The proper machinery should be available to handle the unloading and placing of each section. It is the responsibility of the contractor to make certain no damage has occurred during transit. An overall inspection should be performed upon arrival of the boxes. Before unloading, the delivered box should be checked against the order invoice to ensure accurate delivery of all items.

The installation contractor should contact Jensen Precast prior to planning the installation to obtain a copy of the layout drawing, section weights, lifting instructions and transportation requirements in order to prevent unnecessary delays.

Bedding & Excavation

The successful installation of Jensen Segmental Box Culvert is highly dependent on proper preparation and grading of the sub-grade and base materials. Appropriate dewatering and maintenance of all water levels below the sub-grade elevation until the excavation is backfilled is required to assure that grades are maintained and the sub-grade and base material is not compromised.

Sub-grade materials shall be improved by compaction or replacement as directed by the project geotechnical engineer. A minimum of 4” thick base material shall be placed and compacted to 90 percent ASTM D1557 density or as required by the project geotechnical engineer. The base material shall be fine graded to within ¼” of required grade prior to culvert placement. The attached drawings detail the minimum base requirements.

Excavation and shoring shall be performed in accordance with all applicable Federal and State specific regulations and requirements. If Jensen personnel are assisting or performing installation services, the Jensen supervisor/competent person will perform an inspection of trenches and excavations prior to allowing Jensen personnel to

proceed. To avoid jobsite delays, please ensure compliance prior to scheduling installation.

Rigging and Lifting

Appropriately sized rigging and lifting equipment shall be selected and utilized to lift and place the culvert sections. Rigging should be designed by an experienced professional. Consult Jensen Precast regarding lifting weights and lifting connection equipment required specific to your project. Moving, tugging or sliding by exerting force on the box section with excavating equipment is prohibited.

Alignment and Placement

Alignment of the box culvert can best be controlled with a laser instrument. Set each section on internal centerline at the invert of each section. Check alignment, grade and run length as often as needed to keep the run on track. Unless otherwise specified on layout drawings provided by Jensen Precast, allowances for ½" joint gaps exist. Run length should be checked often enough to accommodate any adjustments.

Review the project specific layout drawings prior to culvert placement to determine the appropriate starting end, direction of lay, and design joint gap to avoid having to pull, push or "come along" sections together. Unless specified when the purchase order is issued, box culvert runs are designed to be placed downstream to upstream (upslope) with a ½" joint gap. The segmental box culvert sections are designed to be placed in a direction such that the tongue of the incoming bottom section seats in the groove of the previously placed bottom section and the groove of the incoming top section is placed down over the tongue of the previously placed top section. Attempting to place the culvert in the opposite direction will result in additional labor requirements as well as potentially disrupting the bedding material creating joint sealing issues. The attached drawings detail the proper placement sequence.

Joint Sealant

To facilitate proper sealing of the sections, it is imperative that two bottom sections are placed prior to the placement of the first top section and during the progression of the placement one bottom section always extends beyond the top section currently being placed. The attached drawings detail the proper placement sequence.

1" size joint sealant to seal the joint's annular space conforming to the requirements of ASTM C990 should be utilized. The joints of the box sections shall be clean, dry, and free from deleterious material before placing sealant. Follow sealant manufacturer's instructions. Jensen Precast can supply the joint materials if included in the quotation and specified on the purchase order. After installation, if the interior joints are larger than that specified in the project specifications, the joint shall be grouted with non-shrink grout. Unless specifically included in the quotation, Jensen Precast is not responsible for any required joint grouting.

Backfill

Backfill materials shall be placed uniformly on each side of the culvert run to avoid potential sliding of the culvert alignment during compaction. Backfill materials, compaction, depth of layers, and methods shall be as directed by the project geotechnical engineer.

Construction equipment loads transferred to a box section before, during or after back fill placement, either directly or through the fill, shall not be greater than loads specified in the constructions specifications.

Multiple Barrel Runs

If the culvert run is multi-barrel a 3” space shall be left between the parallel culverts. This gap shall be filled with grout or 1 ½ sack mix per cubic yard cement sand slurry and allowed to cure prior to backfilling the excavation to assure that all horizontal forces are uniformly transferred from outer sidewall to outer sidewall. Failure to do so can cause inner wall failure due to point loading the structure. The attached drawings detail the proper placement sequence.

FILE NO. EXCAVATION-BASE

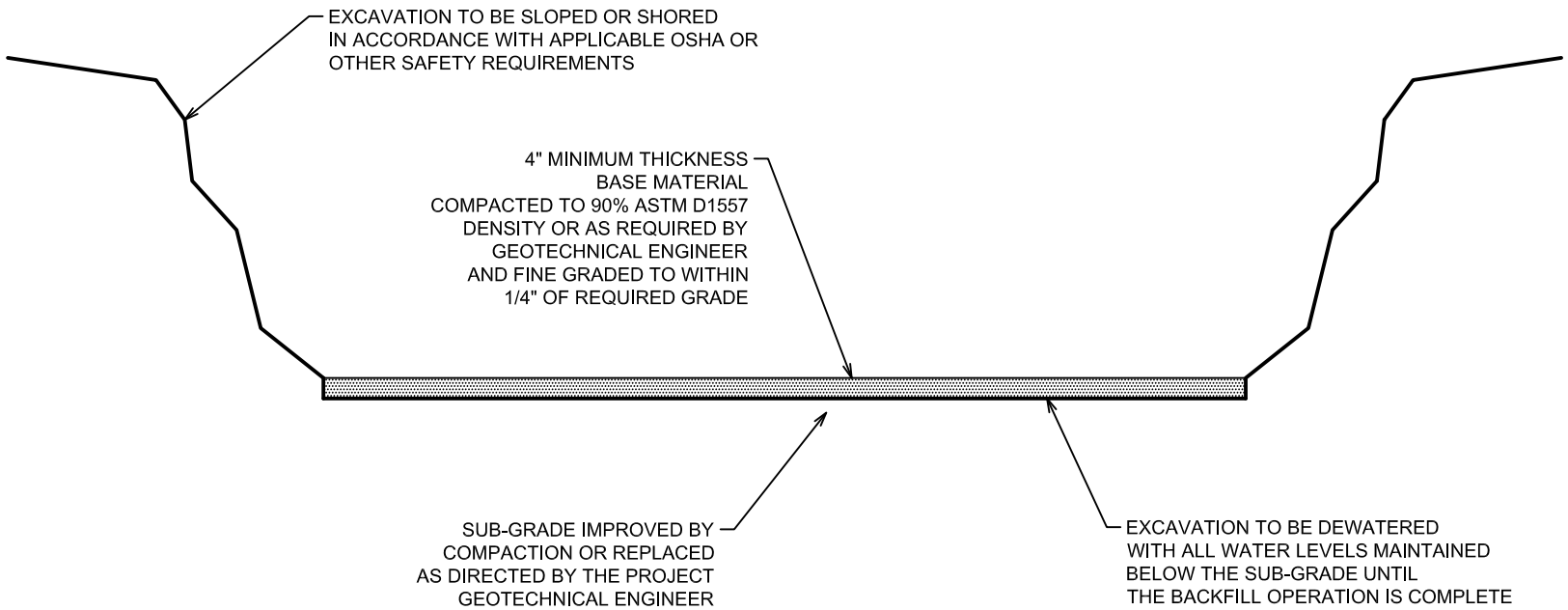

BOX CULVERT EXCAVATION AND BASE

MONOLITHIC
BOX CULVERT
INSTALLATION
JENSEN PRECAST

REV.	DATE	DESCRIPTION
3		
2		
1	01-10-11	GENERAL REVISION
0	10-21-10	NEW DRAWING

JENSEN PRECAST®

THIS DOCUMENT AND THE DATA DERIVED HEREIN OR HEREWITH IS NOT TO BE REPRODUCED, USED OR DISCLOSED, IN WHOLE OR IN PART, BY ANYONE WITHOUT THE WRITTEN PERMISSION OF JENSEN PRECAST.

Rev B

DATE: _____

CHECKED BY: _____

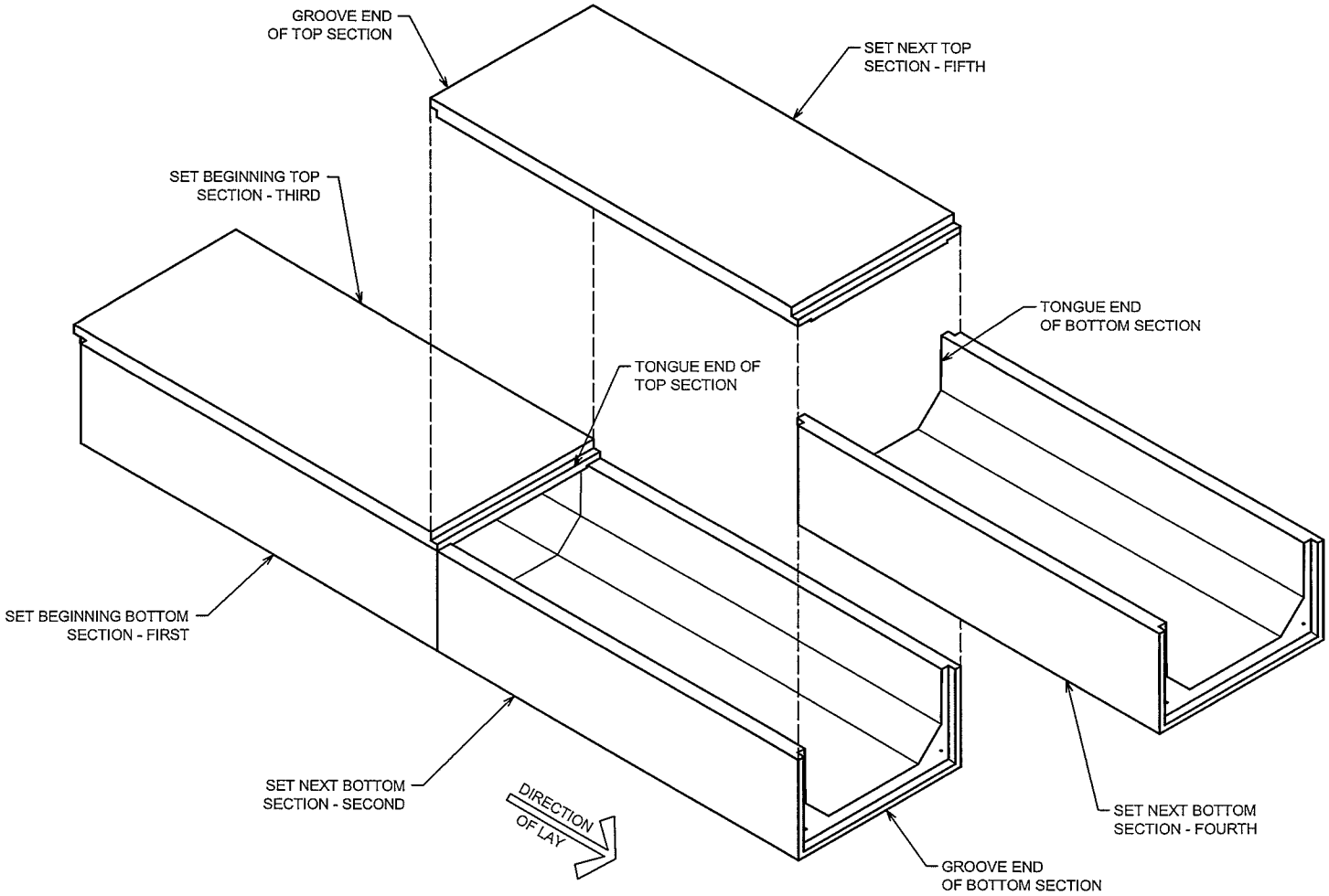

FILE NO. INSTALL-SEQUENCE

TYPE 1
SPLIT BOX CULVERT
INSTALLATION SEQUENCE
JENSEN PRECAST

REV.	DATE	DESCRIPTION
3		
2		
1	01-10-11	GENERAL REVISION
0	06-21-06	NEW DRAWING

JENSEN PRECAST ®

THIS DOCUMENT AND THE DATA DERIVED HEREIN OR HEREWITH IS NOT TO BE REPRODUCED, USED OR DISCLOSED, IN WHOLE OR IN PART, BY ANYONE WITHOUT THE WRITTEN PERMISSION OF JENSEN PRECAST.

DATE: _____

CHECKED BY: _____

Rev B

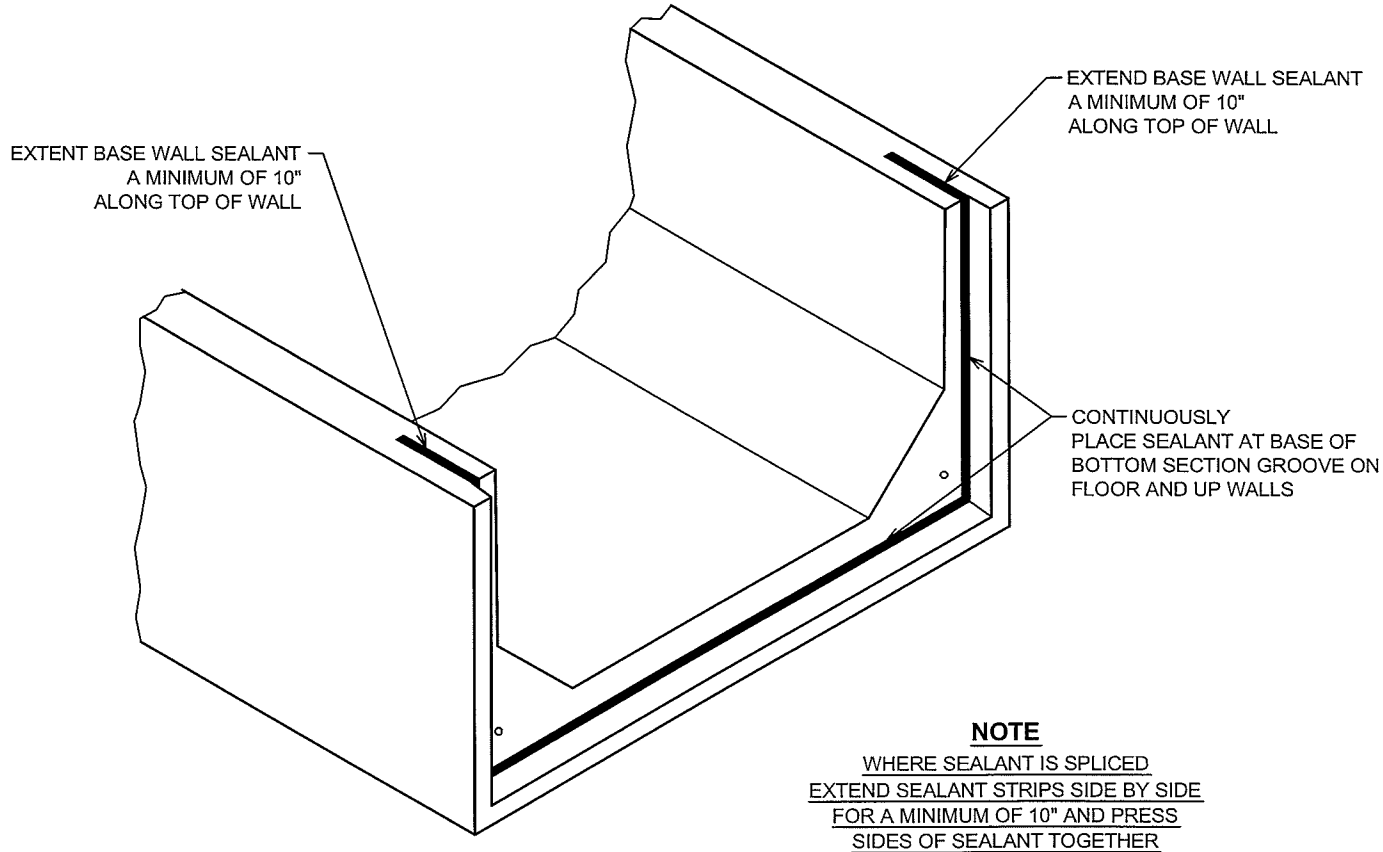

NOTE

WHERE SEALANT IS SPLICED
EXTEND SEALANT STRIPS SIDE BY SIDE
FOR A MINIMUM OF 10" AND PRESS
SIDES OF SEALANT TOGETHER

STEP 1 - BOTTOM WALL AND FLOOR SEALANT

TYPE 1
SPLIT BOX CULVERT
SEALANT PLACEMENT
JENSEN PRECAST

REV.	DATE	DESCRIPTION
3		
2		
1	01-10-11	GENERAL REVISION
0	06-21-06	NEW DRAWING

JENSEN PRECAST ®

THIS DOCUMENT AND THE DATA DERIVED HEREIN OR HEREWITH IS NOT TO BE REPRODUCED, USED OR DISCLOSED, IN WHOLE OR IN PART, BY ANYONE WITHOUT THE WRITTEN PERMISSION OF JENSEN PRECAST.

FILE NO. SEALANT-PLACEMENT-01

Rev B

DATE: _____

CHECKED BY: _____

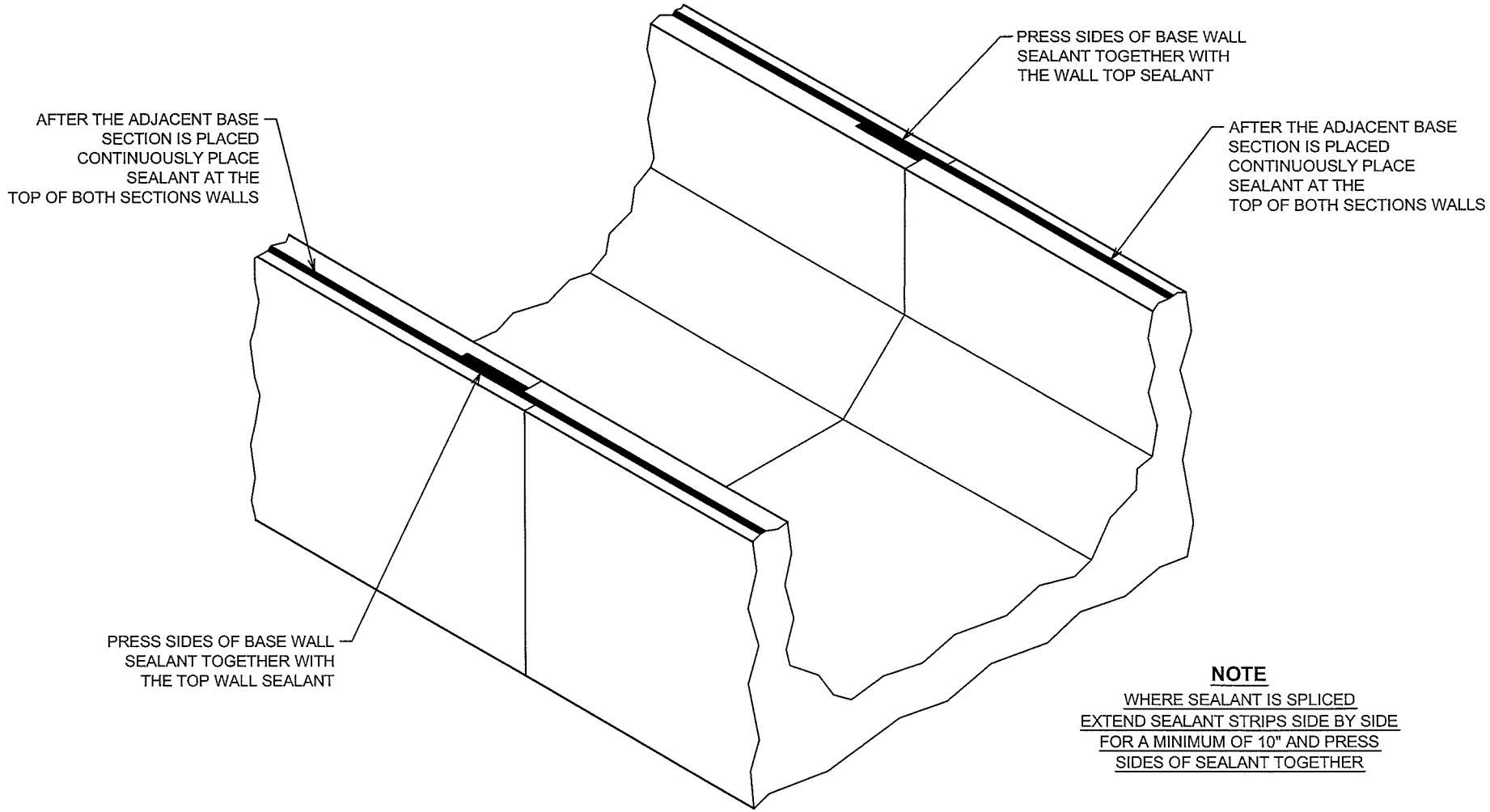

NOTE

WHERE SEALANT IS SPLICED EXTEND SEALANT STRIPS SIDE BY SIDE FOR A MINIMUM OF 10" AND PRESS SIDES OF SEALANT TOGETHER

STEP 2 - WALL TOP SEALANT PLACEMENT

FILE NO. SEALANT-PLACEMENT-02

Rev B

DATE: _____

CHECKED BY: _____

8

TYPE 1
SPLIT BOX CULVERT
SEALANT PLACEMENT
JENSEN PRECAST

REV.	DATE	DESCRIPTION
3		
2		
1	01-10-11	GENERAL REVISION
0	06-21-06	NEW DRAWING

JENSEN PRECAST ®

THIS DOCUMENT AND THE DATA DERIVED HEREIN OR HEREWITH IS NOT TO BE REPRODUCED, USED OR DISCLOSED, IN WHOLE OR IN PART, BY ANYONE WITHOUT THE WRITTEN PERMISSION OF JENSEN PRECAST.

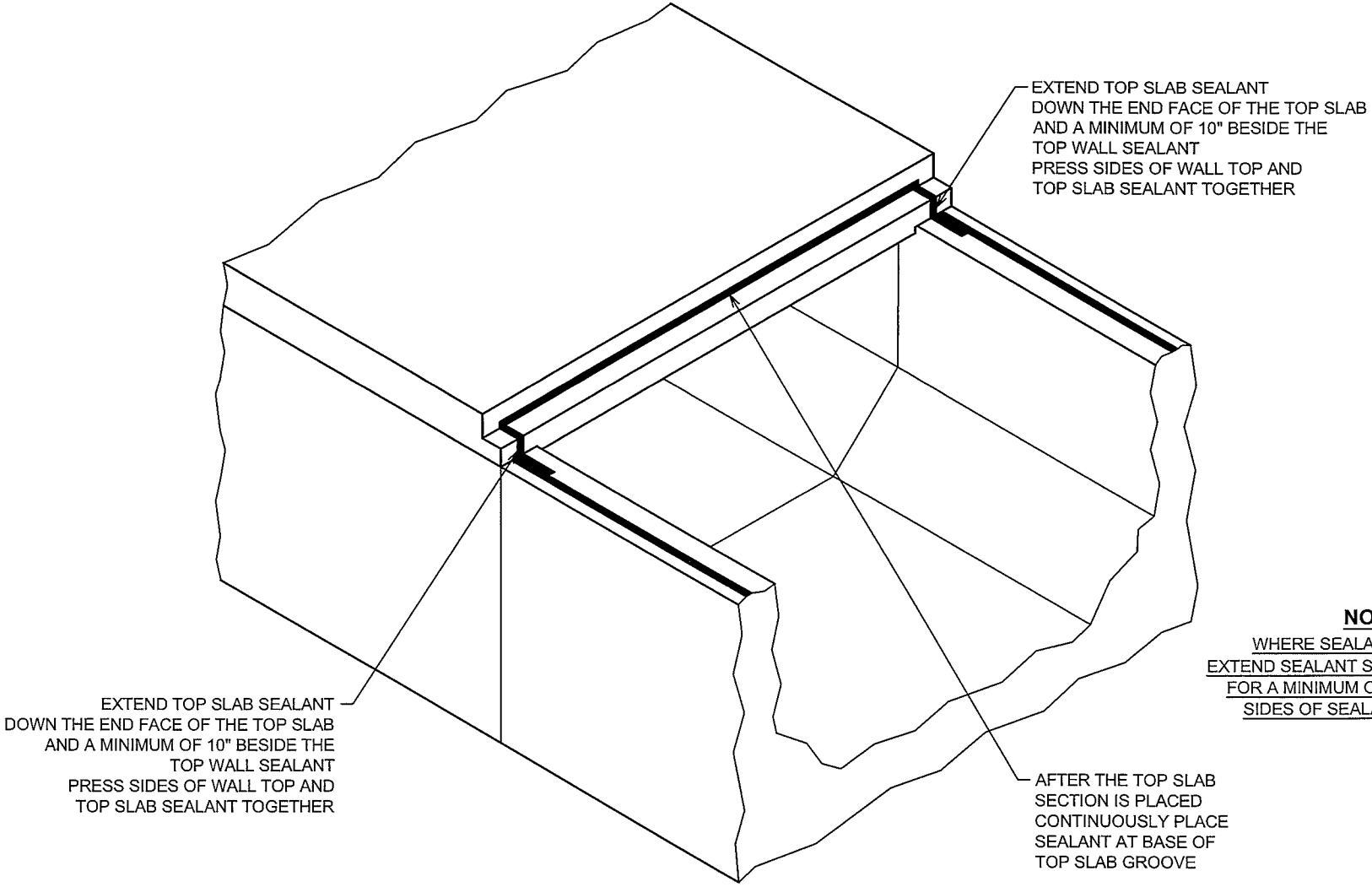

NOTE

WHERE SEALANT IS SPLICED
EXTEND SEALANT STRIPS SIDE BY SIDE
FOR A MINIMUM OF 10" AND PRESS
SIDES OF SEALANT TOGETHER

STEP 3 - TOP SLAB END SEALANT PLACEMENT

FILE NO. SEALANT-PLACEMENT-03

Rev B

DATE: _____

CHECKED BY: _____

TYPE 1
SPLIT BOX CULVERT
SEALANT PLACEMENT
JENSEN PRECAST

REV.	DATE	DESCRIPTION
3		
2		
1	01-10-11	GENERAL REVISION
0	06-21-06	NEW DRAWING

JENSEN PRECAST®

THIS DOCUMENT AND THE DATA DERIVED HEREIN OR HEREWITH IS NOT TO BE REPRODUCED, USED OR DISCLOSED, IN WHOLE OR IN PART, BY ANYONE WITHOUT THE WRITTEN PERMISSION OF JENSEN PRECAST.

FILE NO. MULTI-BARREL-INSTALL

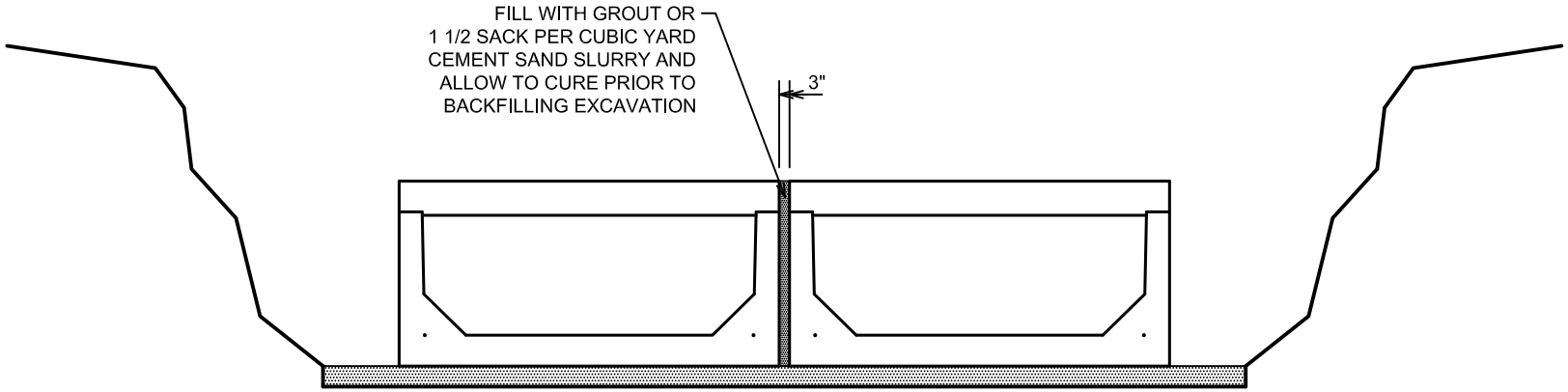

MULTI BARREL INSTALLATION

TYPE 1 SEGMENTAL
BOX CULVERT
INSTALLATION
JENSEN PRECAST

REV.	DATE	DESCRIPTION
3		
2		
1	01-10-11	GENERAL REVISION
0	10-21-10	NEW DRAWING

JENSEN PRECAST®

THIS DOCUMENT AND THE DATA DERIVED HEREIN OR HEREWITH IS NOT TO BE REPRODUCED, USED OR DISCLOSED, IN WHOLE OR IN PART, BY ANYONE WITHOUT THE WRITTEN PERMISSION OF JENSEN PRECAST.

CHECKED BY: _____ DATE: _____

Appendix C: US Forest Service Resource Protection Measures

Background
The Marlette Creek Restoration and State Route (SR)28 Crossing Improvement Project (Project) is located in Washoe County, Nevada, adjacent to SR 28 approximately 5 miles north of the junction with US Highway 50 and approximately 7 miles south of Incline Village, Nevada (**Figure 1 Project Location and Vicinity**). The Area of Potential Effect (APE) is 42 acres and includes the Main and South Forks of Marlette Creek and the Chimney Beach Parking Area on the east side of SR 28, the SR 28 right-of-way and existing culvert, a section of the Main Fork on the west side of SR 28, including a newly installed infiltration basin, existing roads, and staging areas. The Project is located at an elevation of 6,400 feet within the USGS Marlette Lake Quadrangle in T15N R 18E Sec 14.

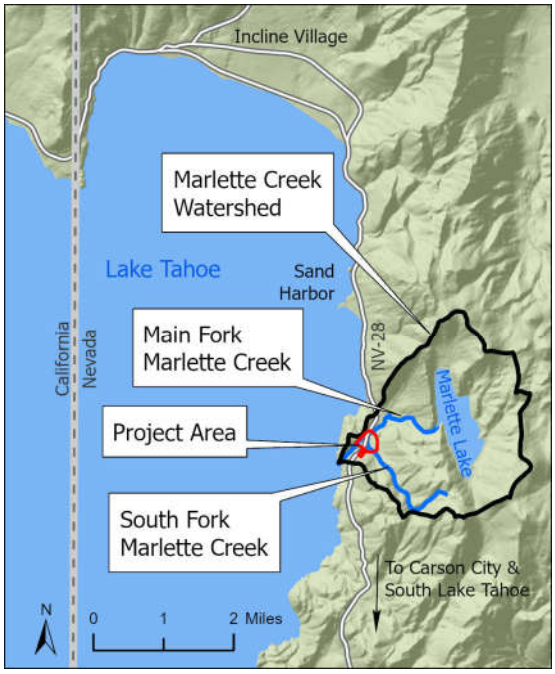

Figure 1. Project Location and Vicinity with Project Area (in red)

Project Need
Marlette Creek and its South Fork have been impacted by uses such as logging, water diversions and dams, and construction of roads over the past 150 years, resulting in channel incision and narrow riparian widths. Additionally, the Main Fork of Marlette Creek is crossed by a large road and associated fill prism at SR 28. Upstream of the culvert, the creek is eroding the road embankment, resulting in degraded water quality and jeopardizing essential infrastructure. At the downstream end of the culvert, there is a 4.5-foot drop impeding aquatic organism passage. On the South Fork of Marlette Creek, a dirt road crossing restricts streamflow into a 40" corrugated metal pipe which also restricts aquatic organism passage. Restoration of these reaches of Marlette Creek is needed to improve in-channel aquatic habitat, provide additional habitat access, expand riparian areas, reduce degradation of nearby infrastructure, and improve water quality.

Project Description

The Project will restore and enhance Marlette Creek and the South Fork of Marlette Creek in the vicinity of SR28. The restoration includes the following major components as shown in **Figure 2 Project Overview.**

<u>Main Fork of Marlette Creek</u>

- Install coffer dams and diversion pipe to dewater active work areas for components described within the Main Fork of Marlette Creek.
- Realign and restore a 250 linear foot section of the main fork of Marlette Creek upstream of SR 28 using excavation and appropriate natural grade controls made of wood or rock and native vegetation to reconnect the creek with an inset floodplain.

South Fork of Marlette Creek

- Install coffer dams and diversion pipe to dewater active work areas for up to 1,300 linear feet of the South Fork of Marlette Creek.
- Realign and restore up to 900 linear feet of the South Fork of Marlette Creek using excavation and appropriate natural grade controls made of wood or rock. Utilize native vegetation to stabilize the eroding bed and banks to reconnect the creek with an inset floodplain.
- Remove an existing corrugated metal culvert crossing Mine Shaft Road and construct a new ford using rock to improve hydraulic connectivity.

Culvert and Downstream Reach

- Install coffer dams and diversion pipe to dewater active work areas for components described here.
- Create riffle-pool fish habitat downstream of the SR 28 culvert outlet on Marlette Creek for 125 linear feet using large rock and stream bed material consisting of sands, gravels, and cobbles.
- Restore fish passage at culvert outlet by raising base level and creating plunge pool at culvert outlet in accordance with Aquatic Organism Passage (Natural Resources Conservation Service, Conservation Practice Standard, USDA NRCS 2022) and Guidelines for Salmonid Passage at Stream Crossings (NMFS 2023). Fish passage is designed for adult Lahontan cutthroat trout during spring months when flows are expected to be highest.
- Modify and extend the existing box culvert at SR 28 for up to 15 feet upstream to reduce road embankment erosion and allow for juvenile trout passage.

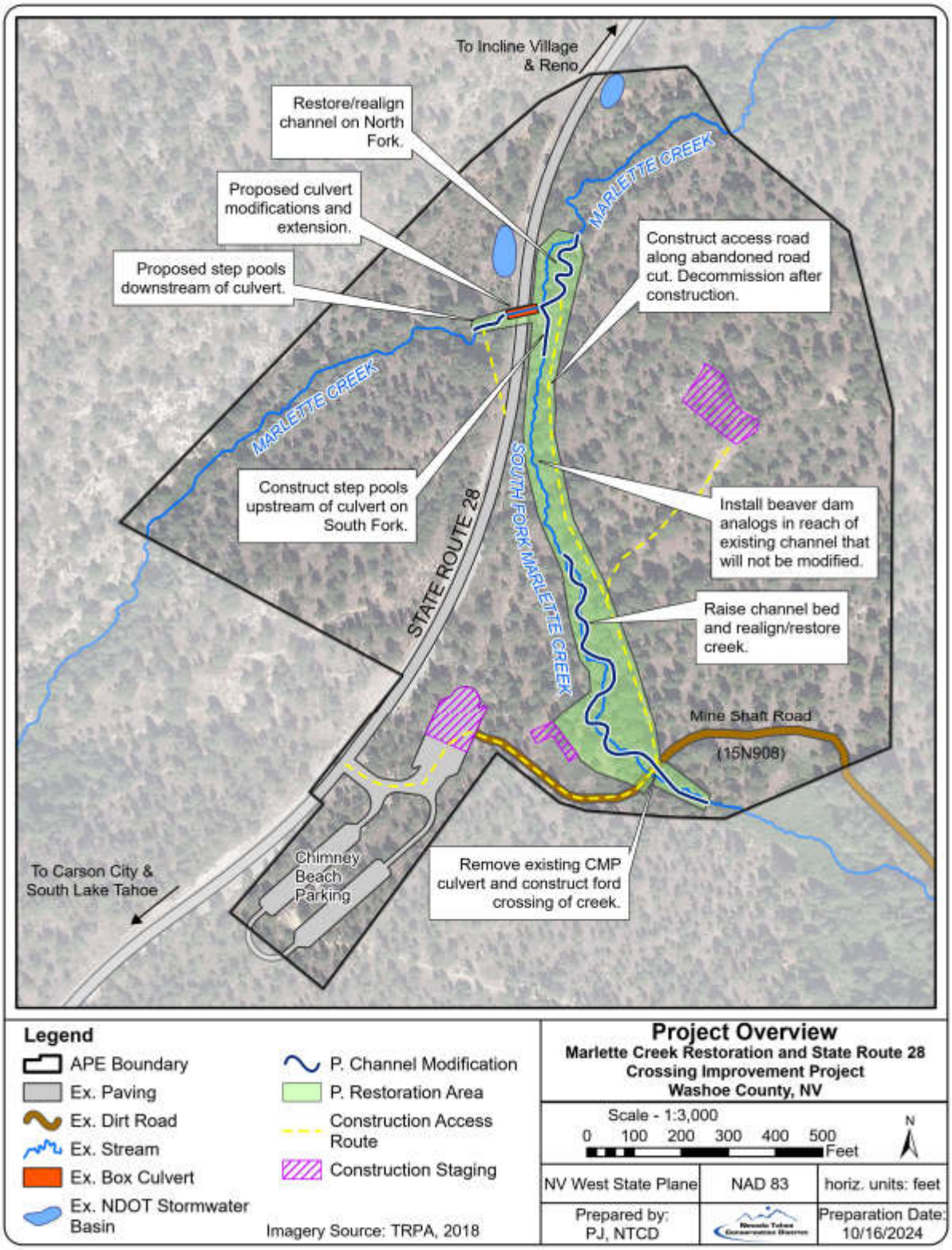

Figure 2. Project Overview

Project Components

- Remove up to 70 pines, firs, and cedars < 12” DBH and 35 pines, firs, and cedars >12” DBH within the riparian zone. Store the cut trees for creation of in-stream woody structures and floodplain roughness.
- Re-establish up to 750 feet of an existing unnamed dirt road for construction access to the site.
- Install coffer dams and diversions to dewater up to 1,300 linear feet of the South Fork of Marlette Creek prior to construction.
- Remove remnant piping and gabions on the South Fork of Marlette Creek.
- Restore approximately 900 linear feet of the South Fork of Marlette Creek channel that is severely incised to stabilize the eroding bed and banks, encourage riparian vegetation, and reconnect the creek with an inset floodplain. This could entail channel realignment using excavation of adjacent areas and filling eroded sections with coarse sand, gravels, cobbles, wood, and sod to repair head cuts and create new channel and floodplain areas.
- Install coffer dams and diversions to dewater up to 125 linear feet of the Main Fork of Marlette Creek prior to construction.
- Construct a new 250 linear foot section of the Main Fork of Marlette Creek adjacent to the existing channel using excavation, native vegetation, coarse sand, cobble, rock, and wood.
- Excavated soil from the new channel construction could be stored in an on-site staging area to backfill the old alignment.
- Install coffer dams and diversions to dewater both the Main Fork and South Fork of Marlette Creek prior to construction of box culvert work and downstream step pools. Dewatering will occur either by diversion of water over SR 28 with a pipe and associated speed bump or bore pipe through the road embankment.
- Extend the existing box culvert under SR 28 for up to 15 feet upstream to reduce road embankment erosion and modify the inside using cobble, boulders, and concrete to allow for juvenile trout passage.
- Establish riffle-pool fish habitat on the Main Fork of Marlette Creek for 125 linear feet downstream of the SR 28 culvert outlet using large rock and stream bed material consisting of sands, gravels, and cobbles in a dewatered stream channel. This will eliminate the passage barrier at downstream end of culvert and will create an appropriately-sized plunge pool with sufficient depth and distance below the culvert (as outlined in NMFS 2023) to allow for passage of adult Lahontan cutthroat trout and sufficient fish jumping/burst speed (Kondratieff and Myrick 2006).
- Remove earthen plugs on the new Main Fork channel left in place during Phase 1 to divert water from the old channel. Remove diversion pipe utilized for dewatering and restore area.
- Backfill up to 250 linear feet of the old Main Fork alignment with native fill from Phase 1 and revegetate with native seed, shrubs, and trees.
- Decommission all access roads and staging areas using re-contouring, native plants, and log scatter at the end of the project construction.
- Remove an existing corrugated metal culvert on the South Fork channel at Mine Shaft Road and construct a ford using rock to improve future vehicle access while ensuring fish passage is not impaired/restricted.
- Electrofishing surveys will be performed pre-construction and post-construction to determine success of fish passage.

Project Schedule

Construction is proposed to begin as early as July 2025 and implemented over one construction season, with anticipated completion by October 2025.

Construction will begin with a nesting bird survey one week prior to planned tree removal in July 2025. Approximately 105 trees throughout the project site will be removed to reduce conifer encroachment and restore natural topography. If any trees are found to have nesting birds and are identified for removal, they will be preserved or removed after nesting season. Trees will be stored for use within the project. Some select trees will be left partially cut, to be knocked down with root wads intact and used in the channel restoration.

Restoration activities will begin with the installation of temporary best management practices and the reestablishment of the access road along the South Fork of Marlette Creek accessing the Main Fork. The new alignment of the Main Fork just upstream of the culvert will be constructed, and earthen plugs left in place at both ends to allow for some channel seasoning and vegetation establishment. This work outside of a wetted area is being completed first to allow for vegetation growth while other aspects of the Project are completed. The earthen plugs will be removed later in the construction sequence to activate the new channel. Soil excavated for the construction of the realignment will be stored on site to backfill the old alignment.

Restoration activities on the South Fork channel will begin in July or August, when water levels are lowest. All imported materials will be certified weed-free and double-washed to remove fines prior to arriving at the project site.

Once channel work at the South Fork is completed, restoration actions will shift back to the Main Fork of Marlette Creek. Subsequently, modifications to the existing box culvert at SR 28 will occur. Activation of the new section of the Main Fork will occur through plug removal and backfill of the old Main Fork channel. The road that was constructed for access to these areas will be removed once work on the Main Fork is completed.

Once work is largely completed upstream of the SR 28 culvert, construction will move to the downstream end of the culvert where a series of pools will be constructed for approximately 125 linear feet to eliminate the current 5-foot drop, replacing it with a series of one-foot drops that allows for the passage of juvenile Lahontan Cutthroat trout (12” jumping height). The eroded embankment will be repaired and the pools constructed with natural channel bank materials.

Finally, an existing CMP culvert will be removed within the South Fork of Marlette Creek and replaced with a ford crossing. Construction of the ford crossing is planned to be one of the final steps in construction so that the existing abandoned forest service road can be utilized for construction access with minimal water quality effects.

Construction Access

Access to the various sites upstream of the SR 28 culvert will be via Mine Shaft Road (15N09A), an abandoned Forest Service road paralleling the South Fork. Mine Shaft Road splits after the existing CMP culvert crossing and an abandoned no name road continues to parallel the South Fork. The abandoned road cut narrows and becomes less defined as it approaches the confluence. All construction access to the east side of SR 28 will be from the abandoned road, the road will need to be widened and cleared to gain access to the Main Fork and small tree and brush removal will be required to access the SR 28 culvert. Short access points from the abandoned road will be established to gain direct access to the channel and additional clearing and grubbing will be required to remove brush and small diameter (<14” DBH) conifers. Areas disturbed by construction access routes will be restored and revegetated at the end of the project. Temporary construction roads used in both phases will be winterized at the end of phase 1 and the abandoned Forest Service road will be decommissioned, up to the intersection with Mine Shaft Road, at the end of the project.

Access to the Main Fork downstream of the SR 28 culvert will be from a low sloping access point along the southwest side of the SR 28 embankment. A location has been identified, approximate location shown on Figure 2, that provides direct access to the project boundary and the downstream section of the SR 28 culvert. Areas disturbed will be restored and revegetated at the end of the project. This access allows avoidance of an unverified heritage site.

Construction Staging

Staging areas will be needed for construction equipment and machinery, downed trees, and excavated earthwork. Three staging areas have been identified; however, it will be left to the contractor to decide which sites will be used. The first site is located just beyond the Forest Service gate at the Chimney Beach parking lot, the next is located in a clearing on the north side of Mine Shaft Road, and the third site is located towards the end of Mine Shaft Road. Construction BMPs such as sediment logs or filter fencing will be installed and maintained around all staging areas. Any disturbance in staging areas will be restored prior to the end of construction using soil decompaction methods and native seeding.

Resource protection measures (RPMs)

Prior to construction, all contractor, and subcontractor project personnel will receive training from qualified resource specialists (Nevada Tahoe Conservation District Personnel) regarding the appropriate work practices necessary to effectively implement these Resource Protection Measures included herein including appropriate resource avoidance measures; impact minimization procedures; the importance of sensitive resources, and the purpose and methods for protecting such resources. Nevada Tahoe Conservation District (NTCD) will coordinate with the contractor on a daily basis to ensure RPMs are being implemented properly. If it is determined if RPMs are not being followed, NTCD will report to USFS staff.

The following resource protection measures relevant to terrestrial and aquatic wildlife species/habitat, vegetation, water quality and cultural resources will be incorporated into the design and implementation of the project:

- WL- 1: Nesting Bird Surveys
  Nesting bird surveys will be conducted (NTCD/Contractor) no more than 14 days prior to construction activities if work is scheduled to occur during the breeding season—April through August. If a nest is found, exclusionary avoidance zones (to be determined based on species-specific needs) will be created surrounding any active nests within or adjacent to the project.
- WL– 2 Marten Den Surveys
  Conduct (NTCD/Contractor) pre-implementation camera surveys where project activities would occur within suitable marten denning habitat plus a 50-meter buffer. Conduct surveys the same season as implementation. If marten are detected, follow-up with pedestrian den surveys no more than three weeks before project initiation and regardless of season. Possible dens will be further monitored by remote camera in order to determine if they are being actively used by marten. Based upon the results, the Responsible Official may implement a Limited Operation Period (LOP) and/or adapt construction timelines or facility locations as determined necessary to provide adequate protection. If dens of other species are located during the surveys it would be up to the discretion of the project biologist to conduct camera surveys and/or protect the den.
- WL– 3 American Goshawk
  The Marlette Creek protected activity center (PAC) shall be surveyed prior to commencement of

construction. If the project is proposed to begin prior to June 1, dawn acoustical surveys together with a stand search will be performed. If the project begins after June 1, broadcast surveys will be performed to cover the PAC. A minimum of two surveys will be completed prior to project implementation for each year of the project. If an active nest is found at any point during the survey effort, A Limited Operating Period would be implemented (see WL-9)

- WL– 4 Bat Surveys
  If tree removal occurs May 1 – August 31, surveys for possible bat roosts will be conducted within 30 days of the start of tree removal activities (NTCD/Contractor). Possible roost structures include snags, complex trees, trees with sloughing bark, and/or large diameter trees. If tree removal activities take more than 30 days and/or if there is a gap of 30 days between tree removal activities, surveys shall be repeated. All potential roosting sites will be surveyed by a qualified biologist to determine usage. Specific survey methodologies will be determined in coordination with the USFS. If an active roost is identified, the Responsible Official may implement an LOP and/or adapt construction and/or tree removal timelines as necessary to provide adequate protection to the individuals in the roost.

- WL– 5 Wildlife Egress
  Measures shall be taken to allow for exit of trapped wildlife within the project area when excavations are left open overnight. Excavations shall be fitted with ramps and/or suitable egress for small mammals, amphibians and reptiles that may be contained within the excavated area. Construction monitors shall inspect all excavations and areas of active construction for trapped wildlife. Wildlife found in active construction areas will be allowed to passively leave the site. If necessary, wildlife may be relocated by a qualified biologist. The construction foreman will notify the environmental monitor immediately if any wildlife enters or becomes trapped in the work area.
- WL- 6: General Wildlife Protections
  - If FS Sensitive or ESA listed species are found during implementation notify the project biologist immediately.
  - All trash and food will be removed from the site at the end of each workday to avoid attracting wildlife to the site.
  - No harm, harassment, or collection of plant and wildlife species will be allowed with the exception of those permitted by USFWS and Nevada Department of Wildlife Scientific Collection Permit. Feeding of wildlife is prohibited.
- WL- 7: Implement Limited Operating Periods to protect nests/dens/roosts, and habitat as needed, based on most recent survey data:
  (1) Peregrine falcon and golden eagle: April 1 through July 31
  (2) Pacific marten: May 1 through July 31
  (3) Willow Flycatcher: June 1 through August 31
  (4) Bat roosts: May 1 through August 31
  (5) American goshawk: February 15 through September 15
  (6) California spotted owl: March 1 through July 9 for activities that only generate noise or smoke; March 1 through August 31 for habitat manipulating activities
  (7) Bald eagle: March 1 through August 31
  (8) Osprey: March 1 through August 15
  (9) Sandhill Crane: April 1 through August 31
  (10) Sierra Nevada red fox: January 1 through June 30

- AQ– 1 Dewatering and Drafting
  Dewatering and drafting shall use screening devices for water pumps. Use pumps with low entry velocity to minimize removal of aquatic species, including juvenile fish, amphibian egg masses and tadpoles, from aquatic habitats. The following criteria shall be used to avoid impacts:
    - Before conducting water pumping activities, decontaminate all external and internal surfaces of pumps and draft hoses. Either 1) power wash with hot water (140°F, allow spray to contact surfaces for 2 minutes) using a hot pressure washer (e.g., a 'Hotsy'), or 2) dry the equipment in the sun until completely dry to the touch.
    - Screens shall be designed to ensure aquatic species are not captured by pumps using small mesh such as burlap sacks or other screening material. Intake screens shall be kept in good repair and present a sealed, positive barrier. The screen face should be oriented parallel to flow for best screening performance.
    - The screen shall be cleaned as often as necessary to prevent approach velocity from exceeding 0.33 feet per second. Operators shall withdraw the screen and clean it after each use, or as often as necessary to keep screen face free of debris. Pumping shall stop for screen cleaning when approximately fifteen percent or more of the screen area is occluded by debris. A suitable brush shall be stowed by pumps for this cleaning operation.
    - Dewatering:
      - Implement and follow the Dewatering and Diversion Plan as outlined in Appendix C.
    - Drafting:
      - Drafting operations are restricted to one hour after sunrise to one hour before sunset to avoid the use of lights that attract fish.
      - Drafting shall occur in streams and pools with deep and flowing water; not streams with low flows and isolated pools. Intakes shall be at least 6 inches above the bottom of the channel and away from submerged vegetation, where practicable. Where not practicable, utilize other means to limit intake of substrate and aquatic species.
      - The pumping rate shall not exceed ten percent of stream flow or 350 gallons per minute (whichever is less) to ensure adequate downstream flow to support aquatic species.
      - Pumping operations shall not result in obvious draw-down of upstream or downstream pools.
- AQ– 2 Aquatic Species Salvage
    - Salvage and recovery of aquatic species will be conducted by the contractor within dewatering areas prior to any in-stream work. Salvage and recovery will be conducted by electrofishing or other suitable means as permitted by and in accordance with a Nevada Department of Wildlife Scientific Collection Permit.
    - Block nets will be installed and maintained by the contractor to ensure fish do not move back into the project area. Nets will be cleaned as often as needed to ensure the nets are functioning and maintaining an intact seam. At a minimum, nets should be checked when first arriving on site in the morning and when leaving the site for the day.
    - Field staff shall make all efforts to minimize impacts to aquatic wildlife during dewatering and associated fish salvage. Field staff will be trained in handling aquatic wildlife and observing animals for signs of stress and shown how to adjust electrofishing equipment to minimize that stress. All field staff involved in electrofishing shall be trained by qualified personnel to be familiar with equipment, handling, settings, maintenance, and safety. Only DC units shall be used, and the equipment shall be regularly maintained to ensure proper operating condition. Voltage, pulse width, and rate

shall be kept at minimum levels, and water conductivity shall be tested before electrofishing starts so minimum levels can be determined. Due to the low settings, shocked fish normally revive instantaneously. Fish requiring revivification shall receive immediate, adequate care. Aquatic species will be moved upstream or downstream of project activities, or to other suitable habitat within the project area.

  - If FS Sensitive or ESA listed species are encountered during electrofishing efforts, stop all efforts and immediately contact LTBMU fisheries staff.

- AQ– 5 Field Gear Disinfection
  Field gear (waders, boots, gloves, nets, buckets, block nets, etc.) will be cleaned, decontaminated, and/or fully dried prior to entering or moving between aquatic habitats per the *Batrachochytrium dendrobatidis* (Bd) Disinfection Protocol (Appendix D).
- AQ-6 Large Equipment Disinfection
  Equipment that enters the water must follow appropriate disinfection procedures before arriving on site. Equipment must be cleaned and disinfected to ensure that the equipment is free of soil, seeds, vegetative material, or other debris or water that could contain or hold seeds of non-native aquatic species. Either 1) power wash with hot water (140°F, allow spray to contact surfaces for 2 minutes) using a hot pressure washer (e.g., a 'Hotsy'), or 2) dry the equipment in the sun until completely dry to the touch. Equipment will be considered clean when visual inspection does not reveal soil, seeds, plant material, standing water, or other such debris.
- AQ– 7 Downed Wood
  Retain/add downed wood in open areas with limited downed wood, where feasible for native amphibian species. Density should be approximately three logs >30 cm diameter at midpoint per 0.4 ha.

- AQ– 8 Aquatic Invasive Species Surveys
  Surveys for aquatic invasive species will be performed prior to any ground disturbance or in-water activities. Removal of aquatic invasive plant species shall be performed prior to dewatering, filling or disturbance. Methods of removal may vary and shall be determined on a case-by-case basis (e.g., hand pulling, suction dredging, placement of benthic barriers, etc.)
- WQ-1: The project shall follow the water quality and erosion control best management practices (BMP) plan as included in the final plan set approved by both USFS LTBMU and the Tahoe Regional Planning agency. Implementation of the BMP plan and associated Stormwater Pollution Prevention Plan will decrease impacts to water quality and freshwater aquatic habitats.

- WQ-2: Locate refueling areas away from waterbodies. Prohibit fuel storage within 10 feet of a waterbodies and outside stream environment zones. Refuel pumps in areas a safe distance (minimum 10 ft) from stream channels and stream environment zones. Place fuel absorbent mats or leak free tray under pump while refueling.
- WQ-3: Spill prevention and clean-up of hazardous materials would be implemented in accordance with the Lake Tahoe Basin Management Unit Spill Notification and Response Plan (for emergency spills).
- WQ-4: Prior to the start of construction, all equipment will be inspected for leaks and regularly inspected thereafter until removed from the project site.
- WQ-5: When dewatering and constructing/removal of coffer dams:

  Design pump intakes and outlets to minimize turbidity and the potential to wash contaminants into adjacent creeks or wetlands. Use an energy dissipater to prevent erosion at the outlet.

Implement a dewatering plan for construction activities that are within the low water or bankfull channel. Localized pumping may be used to clear the construction area of turbid standing water resulting from the excavation of saturated soils and intercepted groundwater. Dewatering activities would be monitored closely to ensure that surface flow and surface saturation is avoided.

To collect and divert the river flow around in-channel construction areas, sandbag coffer dams sealed with 6-millimeter plastic or equivalent will be used upstream to pond water for pumping. The sandbags and plastic sheeting will be keyed into the existing channel bed and banks to minimize leakage. Exact dimensions of coffer dams will depend on size of stream channels and flows.

Locate coffer dams to minimize bed and bank disturbance and the need to remove/prune riparian vegetation.

Turbid water would be discharged to upland areas and return flow to stream would be prevented using detention ponds or other means.

- WQ-6: Leave existing downed trees and coarse woody debris (CWD) that are in perennial or intermittent stream channels in place unless removal is needed to maintain channel stability, as determined by an agency watershed specialist.
- WQ-7: Maintain stream shade and bank stabilizing vegetation along bank of perennial or intermittent streams and lakes. Consult a watershed specialist as needed.
- WQ-8: Use directional falling to keep felled trees out of intermittent and perennial streams, except when LWD is desired in channel to improve stream habitat, in consultation with a LTBMU Aquatic Biologist and/or Hydrologist. When practicable and desirable, use tipping techniques to directionally fell trees with root-ball intact into streams.
- WQ-9: Limit depth of masticated or chipped slash to average 4 inches no more than 6 inches. Prohibit masticated or chipped material in the SEZ, except at crossings and unless necessary for erosion control.
- WQ-10: Where it is necessary to cross an SEZ area with inoperable soil moisture conditions, equipment would operate over a slash mat, or other protective material to minimize soil compaction. If slash is used, it would be removed when operations in the area are concluded.
- WQ-11: Limit mechanical equipment operations in SEZs to operations using equipment that has low ground pressure like rubber-tired equipment, equipment that operates on a bed of slash, or other innovative technologies that reduce impacts to soils.
- WQ-12: Machinery use that disturbs the ground surface within 25 ft of a perennial or intermittent stream channel or other water body (e.g. lakes, ponds) must not result in soil compaction, rutting, or erosion.
- WQ-13: Design permanent stream crossings for hydraulic performance and structural integrity at the bankfull and 100-year peak flow events.
- WQ-14: Best Management Practices (BMPs) would be used in all construction areas to reduce or eliminate the discharge of soil, surface water runoff, and pollutants during ground disturbing activities. Erosion control measures may include but would not be limited to silt fences, straw wattles, coir logs, mulching, gravel/sandbags, construction limit fencing, and revegetation.
- WQ-15: Earthwork would be confined to areas of construction activities described in the design details and permit documents. The construction sequencing for each channel restoration reach would allow for winterization and close-out of certain construction areas as work in those areas is completed.

- WQ-16: Any earthwork within the river channel would take place in the drier months of July, August, and September. All project activities that involve the need for water diversions or new ground disturbance would be planned to be completed by October 1st each year.
- WQ-17: All disturbed areas for floodplain creation, haul roads, and staging areas would be revegetated or stabilized to recover to pre-construction conditions.
- WQ-18: Excavated and fill slopes would be graded to a stable angle and protected against erosion by track walking and seeding/mulching bare areas.
- WQ-19: Each stream restoration site would be stabilized at the end of each construction season. BMPs used for stabilization may include, but not limited to coir logs adjacent to access roads and providing ground cover over bare soil areas.
- WQ-20: To reduce erosion and failure of stream banks, portions of the new channel banks would be stabilized where necessary using measures such as placement of rocks at the toe of banks, grading to create more stable bank slopes, and/or placement of wood jams to direct flows away from banks. Riparian vegetation would also be planted to stabilize the banks. Irrigation and revegetation efforts would continue until revegetation success is determined adequate to prevent water quality degradation and sediment delivery. The first flushes of new channel segments would be monitored to look for any erosion or bank failure issues. These areas would be stabilized, as appropriate.
- WQ-21: New channel segments would be flushed with water several times before being connected to the river flows. This would allow for loose sediments to be flushed downstream, and collected and pumped to designated dewatering sites, or to be embedded into the new channel substrate to minimize the amount of sediment released during flow connection.
- WQ-22: Construction vehicles would be serviced in specified upland areas or stabilized areas to prevent accidental spills of fluids, oils, and lubricants from reaching unprotected soils or surface water.
- WQ-23: Construction equipment shall be cleaned to remove any loose dirt or sediment prior to exiting the site. Access roads would be watered regularly throughout active construction to prevent fugitive dust, and stockpile area entrances would be armored to prevent tracking of sediments onto paved roadways. Earth or other material that has been transported onto paved roadways by trucks, construction equipment, erosion, or other project-related activity would be promptly removed.
- WQ-24: Construction materials would be stored at designated staging areas. Staging areas would be delineated with construction limit fencing. Staging areas will not be in wet meadows, lakes, ponds, or any waterway. Stockpiled material and material transported by vehicles off site would be covered and/or kept visibly moist to control fugitive dust emissions and wind erosion. In addition, each stockpile would be covered during winter periods (if applicable), and silt fencing or coir
- WQ-25: Temporary roads would be out-sloped to ensure that effective drainage is maintained. BMPs (e.g., lead-off ditches, water bars, rolling dips, etc.) would be installed to ensure that temporary roads are hydrologically disconnected from intermittent and perennial stream channels.
- VEG-1: If sensitive species are observed within the Project Area during Project implementation, ground disturbing activities in that area will stop until the LTBMU Forest Botanist is notified and appropriate avoidance or mitigation actions are agreed on. If feasible, identified occurrences would be avoided with a protective buffer from restoration activities and protected *in situ*.
- VEG 2: The Forest Service Manual (FSM 2070) and the LTBMU Land and Resource Management Plan provides direction on active revegetation after land has been assessed and determined as disturbed and is at risk of nonnative plant invasion. Revegetation plans must be submitted to a

USFS botanist with a map of the planned revegetation areas and should be consistent with the following guidelines:

- *Site Preparation*-All compacted areas are to be tilled to a depth of 12" where soil depth allows. De-compaction should occur within a week of reseeding and will not occur when soils are muddy or frozen/covered with snow.
- *Recommended Seed Mix*- Seed mixes will be approved by the Forest Botanist prior to application. Seed must be native and sourced from the Sierra Nevada EPA Level II Ecoregion 5 and within 1,000 feet elevation of the project site. Downslope sources are preferred to upslope.
- *Seed Application*-Seed should be broadcast by hand throughout the site and lightly raked into soil for optimum soil contact. Seed application should occur between Oct 1 – Nov 15, ideally immediately before snow fall to protect seed from predation.
- *Mulch*- Mulch should be applied over the seeded area and must provide over 85% soil cover. If native (on-site) materials such as pine needle mulch or wood chip native material is not available, wood fiber hydromulch composed of non-toxic and biodegradable plant materials may be utilized. All hydromulch mixing shall be performed in a clean tank and no fertilizers, mycorrhizae, or other amendments shall be added to the hydromulch slurry. Hydromulch shall be applied at a rate sufficient to provide visible evidence of uniform application.
- *Erosion Control Materials*-Erosion control wattles, jute mesh blankets, or sediment logs will be certified weed free. No straw, hay, compost, fertilizers will be permitted. or plastic-based materials will be approved. Weed free certification will be provided.

- VEG 3: Project area must be monitored for weed emergence and spread for 2-3 years (FS will need to assume responsibility due to the NTCD grant expiring in 2026. Newly introduced species or medium to high management priority species must be treated using EDRR (Early Detection Rapid Response) methods to meet weed cover performance measures.
- VEG 4: Existing infestations of low management priority species must be managed to meet the following native plant cover performance measures but are exempt from weed cover performance measures.
  - Year 1: >20% cover natives, <3% cover weeds
  - Year 2: >50% cover natives, <1% cover weeds
  - Year 3: >70% cover natives, 0% cover weeds
- VEG 5 – Salvaged Sod
  Sod will be harvested and salvaged in disturbance areas (except where weeds are present), watered until re-planted, and used for revegetation of disturbed surfaces during implementation.
- VEG 6: Invasive Plant Protection Measures:
  - **Inventory—**
    - *As part of site-specific planning, project areas and adjacent areas (particularly access roads) will be inventoried for invasive plants.*
    - *Any additional infestation discovered prior to or during project implementation should be flagged and avoided, then reported to the Forest Botanist or their designated appointee for prioritization and assessment for treatment.*
  - ***Equipment Cleaning—***
    - *All equipment and vehicles (Forest Service and contracted) used for project implementation must be free of invasive plant material before moving into the project area. Equipment will be considered clean when visual inspection does not reveal soil, seeds, plant material or other such debris. Cleaning shall occur at a vehicle washing station or steam-cleaning facility before the equipment and vehicles enter the project area.*

- *When working in known invasive plant infestations or designated weed units, equipment shall be cleaned before moving to other National Forest Service system lands. These areas will be identified on project maps.*

- ***Staging areas—****Do not stage equipment, materials, or crews in invasive plant-infested areas.*
- ***Control Areas—****Where feasible, invasive plant infestations will be designated as Control Areas—areas where equipment traffic and soil-disturbing project activities would be excluded. If Control Areas are designated, they will be identified on project maps and delineated in the field with flagging.*
- ***Project-related disturbance—****Minimize the amount of ground and vegetation disturbance in staging and construction areas. Where feasible, reestablish vegetation on disturbed bare ground to reduce invasive species establishment; revegetation is especially important in staging areas.*
- ***Early Detection****—Any additional infestation discovered prior to or during project implementation should be reported to the Forest Botanist or their designated appointee for prioritization and assessment for treatment.*
- ***Post Project Monitoring–****After the project is completed the Forest Botanist should be notified so that (as funding allows) the project area can be monitored for invasive plants subsequent to project implementation.*
- ***Gravel, fill, and other materials—****All gravel, fill, or other materials are required to be weed-free. Use onsite sand, gravel, rock, or organic matter when possible. Otherwise, obtain weed-free materials from sources that have been certified as weed-free. If an LTBMU inspector is not available to inspect material source, then the project proponent will provide a weed-free certificate for its material source.*
- ***Mulch and topsoil—****Use weed-free mulches and topsoil. Salvage topsoil from project area for use in onsite revegetation, unless contaminated with invasive species. Do not use material (or soil) from areas contaminated by cheatgrass.*

The Forest has determined that the Project will be implemented under the provisions of the *Programmatic Agreement Among the U.S.D.A. Forest Service, Pacific Southwest Region (Region 5), California State Historic Preservation Officer, Nevada State Historic Preservation Officer, and the Advisory Council on Historic Preservation Regarding the Processes for Compliance with Section 106 of the National Historic Preservation Act for Management of Historic Properties by the National Forests of the Pacific Southwest Region* (2018) (R5 PA). The following resource protection measures relevant to cultural resources will be incorporated into the design and implementation of the Project, in accordance with the Approved Standard Protection Measures in Appendix E, Stipulation 1 of the R5 PA:

- CUL 1: There are known historic properties within the proposed project area. All historic properties will be flagged and avoided.
- CUL 2: In the event of an unanticipated effect to a historic property during implementation, all project activities that could result in further damage to the historic property will halt, and the Forest will notify SHPO and any affected tribe concerning proposed actions to mitigate adverse effects.

Best Management Practices (BMPs)

NEPA analysis provides a conceptual description of the BMPs to be applied during project implementation. The conceptual description of BMPs is provided in a US Forest Service Guidance document, the National Core BMP Technical Guide. The guide is found on the Forest Service National Best Management Practices website.

The Region 5 Water Quality Management Handbook was superseded by this National guidance document in recent years, and the National BMP Technical Guide is now used nationwide for better consistency among forests.

Many of BMPs identified below provide guidance for developing project specific language and maps to be incorporated into project contracts and implementation plans prior to project implementation.

The BMPs comply with Section 208 and 319 of the Clean Water Act.

Table 1. National BMPs applicable during project activities.

Table 1 **National BMPs Applicable During Project Activities.**		
USFS BMP Identifier	**Title/*Objective***	**Project specific details added for NEPA analysis**
(N) AqEco-2	Operations in Aquatic Ecosystems/*Avoid, minimize, or mitigate adverse impacts to water quality when working in aquatic ecosystems.*	Leave existing downed trees and CWD that are in perennial or intermittent stream channels in place unless removal is needed to maintain channel stability, as determined by a Forest Service watershed specialist or fish biologist. To avoid removing or altering bank stabilizing vegetation, trees may be marked for removal (live or dead) within 5 ft. of the bank edge of perennial or intermittent streams and lakes, as approved by the fisheries biologist and watershed specialist, only where fuel loads or stand densities exceed desired conditions and where CWD is at or above desired levels or where trees are a hazard to safe operations. Use directional falling to keep felled trees out of intermittent and perennial streams unless the channel reach is identified as deficient in coarse woody debris or such trees are needed for stability or stream shade.
(N) Veg-1	Vegetation Management Planning/*Use the applicable of vegetation management planning processes to develop measures to avoid, minimize, or mitigate adverse effects to soil, water quality, and riparian resources during mechanical vegetation treatment activities.*	Do not use ground-based equipment operations on slopes greater than 30%, and use mechanical equipment buffers surrounding waterbodies (see Veg-3). Limit mechanical equipment operations in SEZs to CTL operations or operations using equipment that has low ground pressure like rubber-tired equipment, equipment that operates on a bed of slash, or other innovative technologies that reduce impacts to soils.

(N) Veg-2	Erosion Prevention and Control/*Avoid, minimize, or mitigate adverse effects to soil, water quality, and riparian resources by implementing measures to control surface erosion, gully formation, mass slope failure, and resulting sediment movement before, during and after mechanical vegetation treatments.*	To minimize compaction, gullying, and rutting, ground-based and cable equipment operations would be conducted only when soils are operable at the 4–8-inch depth. Where implementation monitoring finds potential for sediment delivery, contractor would rake in the berms from ruts created by end-lining or cable yarding.
(N) Veg-3	Aquatic Management Zones/*Avoid, minimize, or mitigate adverse effects to soil, water quality, and riparian resources when conducting mechanical vegetation treatment activities in the AMZ.*	In Region 5 also known as Riparian Conservation Areas, and in Lake Tahoe known as SEZs. Flag and avoid equipment use in and adjacent to special aquatic features (springs, seeps, fens, marshes); use hand treatments in these areas. For CTL operations, use a minimum 25-foot equipment exclusion buffer adjacent to perennial and intermittent streams, lakes and ponds. Leave existing downed trees and coarse woody debris (CWD) that are in perennial or intermittent stream channels in place.
(N) Veg-6	Landings/*Avoid minimize adverse effects to soil, water quality, and riparian resources from the construction and use of log landings.*	Locate landings and refueling areas outside SEZs where operationally feasible. Prohibit landings, fuel storage, and refueling in SEZs. Proper drainage from landings would be provided during use; ditching, sloping, and water bars or other BMP's may be used where needed to disconnect runoff from surface water features. Restore landings after operations are complete using the following methods, as determined by the LTBMU watershed specialist: a) Providing ground cover, such as slash, wood chips or masticated material; b) Ditching, sloping, and water bars may be used where needed; c) Landings would be ripped to approximately a 12-inch depth after ground cover has been spread.
(N) Road-4	Road Operations and Maintenance/*Avoid, minimize, or mitigate adverse effects to soil, water quality, and riparian resources by controlling road use and operations and providing adequate and appropriate maintenance to minimize*	If a native surface road becomes rutted, the road would be closed. If it is determined that stabilization of the road way can be accomplished by spot-rocking or other mitigation of rutted areas, road use may continue.

	sediment production and other pollutants during the useful life of the road.	
(N) Road-5	Temporary Roads/ *Avoid, minimize, or mitigate adverse effects to soil, water quality, and riparian resources from the construction and use of temporary roads.*	Temporary roads would be out-sloped to ensure that effective drainage is maintained. BMPs would be installed as recommended by watershed or transportation specialist to ensure that temporary roads are hydrologically disconnected from intermittent and perennial stream channels. These BMP's could include lead-off ditches, water bars, rolling dips, etc.
(N) Road-10	Equipment Refueling and Servicing/*Avoid or minimize adverse effects to soil, water quality, and riparian resources from fuels, lubricants, cleaners, and other harmful materials discharging into nearby surface waters or infiltrating through soils to contaminate groundwater resources during equipment refueling and servicing activities.*	Locate landings and refueling areas outside SEZs where operationally feasible. Prohibit fuel storage and refueling in SEZs. Spill prevention control measures for hazardous materials of any amount are included in project contract clauses.
WatUses-4	Water Diversions and Conveyances/ *Avoid, minimize, or mitigate adverse effects to soil, water quality and riparian resources from construction, operation, and maintenance of water diversion and conveyance strutures.*	If temporary diversion are needed, locate intake and outflow structures to minimize streambank and streambed damage. Screen intake to minimize impact to aquatic species. No diversions would be created in a Lahontan cutthroat trout-occupied stream.

(N) - Guidance provided in USDA Forest Service National Best Management Practices for Water Quality Management on National Forest Lands, Volume 1: National Core BMP Technical Guide, FS-990a. April 2012.

References:

National Marine Fisheries Service. 2023. Guidelines for Salmonid Passage at Stream Crossings - *For Applications in California at Engineered Stream Crossings to Facilitate Passage of Anadromous Salmonids*. 17pp.

United States Department of Agriculture. 2022. Natural Resources Conservation Service, Conservation Practice Standard, Aquatic Organism Passage, Code 396, 6pp. https://www.nrcs.usda.gov/sites/default/files/2022-09/396_NHCP_CPS_Aquatic_Organism_Passage_2021_0.pdf